STATE OF TEXAS §
§
COUNTY OF FORT BEND §

COMMUNITY AND ECONOMIC DEVELOPMENT PROGRAM AGREEMENT BETWEEN FORT BEND COUNTY AND ROSENBERG RAILROAD MUSEUM INCORPORATED

THIS AGREEMENT is made and entered into by and between Fort Bend County, (hereinafter "County"), a body corporate and politic under the laws of the State of Texas, and ROSENBERG RAILROAD MUSEUM INCORPORATED (hereinafter "Museum"), a Museum's organization in the State of Texas.

WITNESSETH

WHEREAS, the Texas Local Government Code, Section 381.004, authorizes counties to enter into contracts for the purpose of stimulating, encouraging, and developing business location and commercial activity, as well as for the encouragement, promotion, improvement, and application of the arts; and

WHEREAS, Fort Bend County recognizes the Rosenberg Railroad Museum (the "Museum") as a valuable asset that contributes to the County's economic development by attracting tourism and supporting local businesses; and

WHEREAS, the County further recognizes the Museum's importance in preserving and showcasing railroad history and artifacts, thereby contributing to the encouragement, promotion, improvement, and application of the arts; and

WHEREAS, the County desires to support the Museum in its dual role of promoting economic development and enriching the County's cultural landscape; and

WHEREAS, the Texas County Purchasing Act, Texas Local Govt. Code §262.024 (10), exempts from competitive bidding contracts for work performed under a contract for community and economic development.

NOW, THEREFORE, in consideration of the mutual covenants contained herein, the parties agree as follows:

AGREEMENT

1. **Obligations of County**

   A. County agrees to reimburse Museum a maximum payment amount, not to exceed seventy-one thousand dollars and 00/100 (seventy-one thousand dollars and 00/100 ($71,000.00) .00) to Museum in support of the Rail Heritage Project (comprehensive detail and budget as described in Exhibit A to this Agreement). This Funding is an all-inclusive amount, and the County shall pay no additional fee, cost, or reimbursed

02/13/2025 Original (e) sent to Olivia Zanzen, Purchasing

expense pursuant to this Agreement. The County is not obligated to pay more than seventy-one thousand dollars and 00/100 ($71,000.00), regardless of the Museum's total project costs.

B. County shall submit a copy of this Agreement as required by Texas Local Government Code Section 381.005 and shall provide a direct link on the County's website to the location of the agreement information published on the comptroller's Internet website.

2. Obligations of Museum

A. Museum shall use all funds provided by County under this Agreement solely during the Construction Phase of the Project for Civil and Rail Construction Costs at 1921 Avenue F, Rosenberg, Texas. Said improvements shall include drainage and/or expanded utility connections (including water, electricity, and gas) as shown in the attached Civil Plans found in Exhibit B to this Agreement, such improvements to be referred to in this Agreement as the "Project"). Museum is responsible for obtaining all necessary permits and approvals for the Project.

B. The Project shall be Substantially Completed within twelve (12) months of the execution of this Agreement. "Substantially Completed" shall mean that all primary drainage improvements and/or utility connections are installed, inspected, and functional, even if minor finishing work remains.

C. Museum shall provide County with written monthly progress reports on the Project.

D. The Museum shall submit a written invoice to the County requesting payment for the engineering design, construction, and installation of the improvements as described in this Agreement. The invoice must include documentation of all expenditures and payments made. Receipts shall include the date of expenditure, the vendor name, a description of the goods or services purchased, and the amount spent. Receipts shall be submitted to the County Auditor.

E. he Museum is solely responsible for all project costs exceeding seventy-one thousand dollars and 00/100 ($71,000.00). The Museum agrees not to seek reimbursement from the County for any costs above this amount. The County will pay within 30 days of receiving a written invoice approved by the County, provided a satisfactory final inspection of the completed Project (as described in this Agreement) has occurred. No payment is due until the Museum submits a written invoice, the County approves it, and all other conditions of this Agreement are met.

F. Museum shall allow employees or other representatives of County who have been designated by Commissioner's Court to have reasonable access to the Museum Location to ensure that the purposes of this Chapter 381 Agreement are being fulfilled. A designated representative of the Museum shall escort county representatives during their visits.

3. Term

This Agreement is effective upon execution of both Parties and shall continue through July 31, 2026, unless terminated earlier in accordance with the provision Survival. The provisions regarding confidentiality, auditing, reporting and indemnification shall survive the termination or expiration of this Agreement.

4. Audit and Reporting

A. County Audit Rights. The County shall have the right to audit the books and records of the Revenue Fund and the Museum Project expenditures upon thirty (30) days written notice to the Museum.

B. At the discretion of the County, any such audit shall be performed by the County or by outside firms at County expense. The Museum's cooperation shall include, but not be limited to, access to all Museum's books, records, contracts, spreadsheets, correspondence, and documents, in whatever form, that are applicable to the Project Costs. Each year through 12 months after the completion of the project, the Museum shall furnish complete copies of the audited financial statements of the Museum including auditor's opinion and footnotes, to the County within 135 days of the Museum's fiscal year end.

C. Review. The County (on its behalf and on behalf of the Museum) agrees to maintain adequate records and documentation supporting its calculation of the Project Payments, and the Museum and its duly authorized representatives have the right, upon reasonable notice, to review and audit such records at any reasonable time. The County and the Museum agree to negotiate in good faith to resolve any disputes regarding the Museum and Project payments.

D. Annual Report through 12 months after the completion of the project. During the term of this Agreement, the Museum agrees to provide to the County, on an annual basis, through 12 months after the completion of the project, within 135 days of the Museum fiscal year end, a copy of the Museum's annual fiscal audit and an annual report on the following information:
    - The amount and source of revenue in the Project Fund;
    - The amount and purposes of the expenditures from the Project Fund during the prior fiscal year;
    - The amount of Project Costs paid by the Museum or advanced by the Museum or a developer for the Project during the prior fiscal year and the date of such payment or advance;
    - A schedule of Interest that has accrued on the Project funds expended by the Museum's or a developer for the Project Costs minus any prior Project Payments, considering that the Project Payments are applied first to Interest and second to Project Costs; and
    - Any final report of the Museum's auditor relating to amounts owed by the Museum as reimbursement to a developer for Project Costs that were received and approved by the Museum Board of Trustees during the prior fiscal year,

which report will be determinative of the calculation of Project Costs for any amounts advanced by the developer for the Project.

5. Independent Contractor

Museum is an independent contractor and not an employee, agent, or servant of the County. Museum's agents, employees, officers, and volunteers performing work under this Agreement are solely employees of Museum or its permitted subcontractors. Museum and its personnel are not entitled to any privileges or benefits of County employment. Museum retains control over the means and methods of achieving those outcomes of the Project.

6. **Limit of Appropriation**

Museum clearly understands and agrees, such understanding and agreement being of the absolute essence of this Agreement, that County shall have available the total maximum sum of seventy-one thousand dollars and 00/100 (seventy-one thousand dollars and 00/100 ($71,000.00) .00) specifically allocated to fully discharge any and all liabilities County may incur.

7. **Modifications and Waivers**

A. The parties may not amend or waive this Agreement, except by a written agreement executed by both parties.

B. No failure or delay in exercising any right or remedy or requiring the satisfaction of any condition under this Agreement, and no course of dealing between the parties, operates as a waiver or estoppel of any right, remedy, or condition.

C. The rights and remedies of the parties set forth in this Agreement are not exclusive of, but are cumulative to, any rights or remedies now or subsequently existing at law, in equity, or by statute.

8. Insurance

A. Prior to commencement of the Services, Museum shall furnish County with properly executed certificates of insurance which shall evidence all insurance required and provide that such insurance shall not be canceled, except on 30 days' prior written notice to County. Museum shall provide certified copies of insurance endorsements and/or policies if requested by County. Museum shall maintain such insurance coverage from the time Services commence until Services are completed and provide replacement certificates, policies and/or endorsements for any such insurance expiring prior to completion of Services. Museum shall obtain such insurance written on an Occurrence form from such companies having Bests rating of A/VII or better, licensed or approved to transact

business in the State of Texas, and shall obtain such insurance of the following types and minimum limits:

1. Workers Compensation in accordance with the laws of the State of Texas. Substitutes to genuine Workers' Compensation Insurance will not be allowed.

2. Employers' Liability insurance with limits of not less than $1,000,000 per injury by accident, $1,000,000 per injury by disease, and $1,000,000 per bodily injury by disease.

3. Commercial general liability insurance with a limit of not less than $1,000,000 each occurrence and $2,000,000 in the annual aggregate. Policy shall cover liability for bodily injury, personal injury, and property damage and products/completed operations arising our of the business operations of the policyholder.

4. Business Automobile Liability coverage applying to owned, non-owned and hired automobiles with limits not less than $1,000,000 each occurrence combined single limit for Bodily Injury and Property Damage combined.

B. County and the members of Commissioners Court shall be named as additional insured to all required coverage except for Workers' Compensation and Professional Liability (if required). All Liability policies written on behalf of Museum shall contain a waiver of subrogation in favor of County and members of Commissioners Court.

C. If required coverage is written on a claims-made basis, Museum warrants that any retroactive date applicable to coverage under the policy precedes the effective date of the Contract and that continuous coverage will be maintained or an extended discovery period will be exercised for a period of 2 years beginning from the time the work under this Contract is completed.

D. Museum shall not commence any portion of the work under this Contract until it has obtained the insurance required herein and certificates of such insurance have been filed with and approved by Fort Bend County.

E. No cancellation of or changes to the certificates, or the policies, may be made without thirty (30) days prior, written notification to Fort Bend County.

F. Approval of the insurance by Fort Bend County shall not relieve or decrease the liability of Museum.

9. Indemnity

MUSEUM SHALL INDEMNIFY AND DEFEND COUNTY AGAINST ALL LOSSES, LIABILITIES, CLAIMS, CAUSES OF ACTION, AND OTHER EXPENSES, INCLUDING REASONABLE ATTORNEYS FEES, ARISING FROM ACTIVITIES OF MUSEUM, ITS AGENTS, SERVANTS OR EMPLOYEES, PERFORMED UNDER THIS AGREEMENT THAT RESULT FROM THE NEGLIGENT ACT, ERROR, OR OMISSION OF MUSEUM OR ANY OF MUSEUMS AGENTS, SERVANTS OR EMPLOYEES. THE PARTIES AGREE THAT THIS INDEMNIFICATION PROVISION SHALL APPLY DURING THE PERFORMANCE OF SERVICES AS WELL AS DURING THE PERORMANCE OF ANY CONTINUING OBLIGATIONS THAT MAY EXIST (IF ANY) AFTER THE EXPIRATION OF THIS AGREEMENT.

10. Assignment

Neither party to this contract shall assign the contract, nor any interest arising herein, without the written consent of the other.

11. Termination and Notice

A. Termination for Default

1. County may terminate the whole or any part of this Agreement for cause in if Museum materially breaches any of the covenants or terms and conditions set forth in this Agreement or fails to perform any of the other provisions of this Agreement or so fails to make progress as to endanger performance of this Agreement in accordance with its terms, and in any of these circumstances does not commence curing such breach or failure to County's reasonable satisfaction within a period of ten (10) calendar days after receipt of notice from County specifying such breach or failure.

2. If, after termination, it is determined by County that for any reason whatsoever that Museum was not in default, or that the default was excusable, services may continue in accordance with the terms and conditions of this Agreement.

B. Return of Unused Funds Upon Early Termination. If this Agreement is terminated early, Museum shall remit all unused funds to County within 30 days of the effective date of termination, without demand. "Unused funds" shall mean any funds provided by the County under this Agreement that have not been demonstrably and reasonably spent by the Museum as of the effective date of termination, less any reasonable and documented expenses incurred by Museum prior to the effective date of termination and directly related to the performance of this Agreement. Museum shall provide documentation supporting any claimed expenses no later than [30] days following the effective date of termination.

C. Upon termination of this Agreement, County shall compensate Museum in accordance with the Compensation section above, for those services which were provided under this Agreement prior to its termination and which have not been previously invoiced to County. Museum's final invoice for said services will be presented to and paid by County in the same manner set forth in the Compensation section.

D. Each party giving any notice or making any request, demand, or other communication (each, a "Notice") pursuant to this Agreement shall do so in writing and shall use one of the following methods of delivery, each of which, for purposes of this Agreement, is a writing: personal delivery, registered or certified mail (in each case, return receipt requested and postage prepaid), or nationally recognized overnight courier (with all fees prepaid).

E. Notices. A Notice is effective only if the party giving or making the Notice has complied with the requirements of this Section and if the addressee has received the Notice. All notices shall be in writing and shall be delivered to the addresses listed below

County : Fort Bend County
Attn: County Judge
401 Jackson Street
Richmond, TX 77469

Copy to: Fort Bend County
Attn: Purchasing Agent
301 Jackson, Ste. 201
Richmond, Texas 77469

Museum: Rosenberg Railroad Museum Incorporated
PO Box 369
1921 Avenue F
Rosenberg, TX 77471
Attn: Executive Director

A Notice is deemed received as follows:

1. If the Notice is delivered in person, or sent by registered or certified mail or a nationally recognized overnight courier (e.g., FedEx, UPS, DHL), upon receipt as indicated by the date on the signed receipt. 2.
2. If the addressee rejects or otherwise refuses to accept the Notice, or if the Notice cannot be delivered because of a change in address for which no Notice was given, then upon the rejection, refusal, or inability to deliver. 3. If by email, when the email is sent to the designated email address, unless the sending party receives an automated "out of office" reply or notification that the email

address is invalid. A copy of any email notice shall also be sent by one of the methods listed in (1) above.

12. Miscellaneous

A. This Agreement shall be construed under and in accord with the laws of the State of Texas, and all obligations of the parties created hereunder are performable in Fort Bend County, Texas. As required by Chapter 2270, Government Code, Museum hereby verifies that it does not boycott Israel and will not boycott Israel through the term of this Agreement. For purposes of this verification, "boycott Israel" means refusing to deal with, terminating business activities with, or otherwise taking any action that is intended to penalize, inflict economic harm on, or limit commercial relations specifically with Israel, or with a person or entity doing business in Israel or in an Israeli-controlled territory, but does not include an action made for ordinary business purposes. By signature below, Museum represents pursuant to Section 2252.152 of the Texas Government Code, that Museum is not listed on the website of the Comptroller of the State of Texas concerning the listing of companies that are identified under Section 806.051, Section 807.051 or Section 2253.153.

B. In the event of one or more of the provisions contained in this Agreement shall for any reason be held to be invalid, illegal or unenforceable in any respect, such invalidity, illegality, or unenforceability shall not affect any other provision hereof and this agreement shall be construed as if such invalid, illegal, or unenforceable provision had never been contained herein.

C. The waiver by either party of a breach of any provision of this agreement shall not operate as or be construed as a waiver of any subsequent breach.

D. Any amendments to this agreement shall be of no effect unless in writing and signed by both parties hereto.

E. HUMAN TRAFFICKING. BY ACCEPTANCE OF CONTRACT, MUSEUM ACKNOWLEDGES THAT FORT BEND COUNTY IS OPPOSED TO HUMAN TRAFFICKING AND THAT NO COUNTY FUNDS WILL BE USED IN SUPPORT OF SERVICES OR ACTIVITIES THAT VIOLATE HUMAN TRAFFICKING LAWS.

12. Entire Agreement.

It is understood and agreed that the entire Agreement of the parties is contained herein and that this Agreement supersedes all oral agreements and negotiations between the parties relating to the subject matter hereof as well as any previous agreements presently in effect between the parties relating to the subject.

IN WITNESS WHEREOF, this Agreement is signed, accepted, and agreed to by all parties by and through the parties or their agents or authorized representatives. All parties hereby acknowledge that they have read and understood this Agreement. All parties further acknowledge that they have executed this legal document voluntarily and of their own free will.

FORT BEND COUNTY

KP George, County Judge

February 11, 2025
Date

ATTEST:

Laura Richard, County Clerk

ROSENBERG RAILROAD MUSEUM INCORPORATED

Signature of Authorized Agent

Rainey Webster
Name of Authorized Agent

Executive Director
Title of Authorized Agent

02/05/2025
Date

AUDITOR'S CERTIFICATE

I hereby certify that funds are available in the amount of $ 71,000.00 to pay the obligation of Fort Bend County under and within the foregoing Agreement.

Robert Ed Sturdivant, Auditor

Reviewed:

Darren McCarthy
Parks Director

i:\agreements\2025 agreements\parks\rosenberg rm\rosenberg railroad Museum mt 2.3.25.docx 2.4.25

Exhibit A

Rosenberg Railroad Museum Incorporated
Heritage Rail Project & Capital Improvements
Heritage Rail Project Budget

Rosenberg Railroad Museum Incorporated

Heritage Rail Project & Capital Improvements

Project Overview and Impact:

For over 20 years, the Rosenberg Railroad Museum (the "Museum") has been a cornerstone of the Rosenberg community, preserving the rich history of railroading and offering educational programs that foster learning and growth. Through its humanities-focused exhibits and programs, the Museum enhances the cultural and educational landscape, benefiting local communities and residents who are often underserved.

Located in historic downtown Rosenberg, the Museum has welcomed an average of 17,000 visitors annually since 2019, with the exception of 2020. Remarkably, over 54% of these visitors came from outside Fort Bend County. As tourism is a key driver of economic development, the Museum plays a vital role in attracting visitors and offering unique, engaging experiences. Over the past six years, it has hosted more than 90,000 visitors, contributing an estimated $3 million in revenue to businesses in Rosenberg and Fort Bend County.

The Heritage Rail Project represents both a capital improvement initiative and a strategic expansion of the Museum's exhibits and educational offerings. This transformative project includes critical drainage and civil upgrades to the Museum grounds, as well as the installation of over 380 feet of track and sidewalks. The newly constructed track will house four historic railcars, enhancing the Museum's ability to serve as a dynamic destination for visitors.

By adding these historic railcars, the Museum will significantly expand its collection, exhibit space, and tour offerings. These improvements will not only enhance the visitor experience but also increase the time visitors and the time spent at the Museum, thereby further boosting the local economy and solidifying the Museum's role as a cultural and economic asset to the community.

Heritage Rail Project Budget
01.10.2024
Expenditures Through 12/31/2024

	Adjusted Budget	Expenditures	Funding Source
Phase 1: Preconstruction Costs			
Survey	$ 17,000.00	$ 16,800.00	The George Foundation $9,426.23 FBCO -ARPA $7,373.77
Geotech Services	$ 15,500.00	$ 15,288.00	The George Foundation
Engineering and Construction Documents	$ 60,000.00	$ 5,485.77	The George Foundation
Project Administration	$ 20,000.00	$ 20,000.00	The George Foundation$12,626.23
Project Contengency Adjustment	$ 1,321.00		
	$ 113,821.00	$ 113,820.66	

Phase 2: Civil & Rail Construction Costs	Adjusted Budget	Expenditures	Planned Funding Source
Civil Construction Costs	$ 244,080.40	$ 242,379.79	Rosenberg Development Corporation (RDC), $36,000 ARPA Museum Funds or FBCO
Construction Fencing and Acess	$ 14,960.00	$ 14,960.00	Rosenberg Development Corporation (RDC)
Track and Turnout Rail Construction Costs	$ 108,342.18	$ 105,160.24	Rosenberg Development Corporation (RDC) $71,712.58 Museum Funds or FBCO
Contingency/Change Orders for Civil	$ 3,630.00	$ 3,630.00	RDC/FBCO/Museum Reserves
Relocation Caboose for Construction	$ 18,940.00	$ 18,940.00	Restricted Private Donations
Line of Credit-Closing Cost	$ 7,234.00	$ 7,234.00	Restricted Private Donations/Museum Reserves
Line of Credit- Interest Fees (temporary)	$ 4,054.00	$ 344.00	Museum Reserves
Total Phase 2 Construction Cost	$ 401,240.58	$ 392,648.03	

Phase 3: Historic Rail Cars	Adjusted Budget	Expenditures	Planned Funding Source
Four Historic Rail Cars	$ 233,000.00		In-Kind Donation from GCC-NRHS
Relocation of Historic Rail Cars and install	$ 268,000.00		$150,000 HWF/$68,000 Chapman Hauling
Electric Upgrade for Rail Cars	$ 32,000.00		
Rail Car Perservation, Improvements, Education and Exhibit Programs	$ 125,000.00		Various Planned Preservation Grants in 2025/2026/2027 Grant Cycles
	$ 658,000.00	$ -	

Project Total	$ 1,173,061.58	$ 506,468.69

Rosenberg Railroad Museum

Heritage Rail Project

Sources of Support (Received and Planned)

as of 01/10/2025

	Received	Pledged	Funds Pending Application	Total	Notes
Phase 1: Preconstruction					
George Foundation	$ 100,000.00				
FBCO ARPA Engineering Cap Impv. Education Expansion	$ 13,820.66				
	$ 113,820.66	$ -	$ -	$ 113,820.66	
Phase 2: Contruction Civil/Rail					
Rosenberg Development Corporation		$ 260,000.00			RDC ContractReimbursable/ LOC to cover
FBCO ARPA Cap Improvement (2024)	$ 36,000.00				Funds Expire 12/31/2024
RRM Private Donation Restricted	$ 25,250.00	$ 4,000.00			Museum Restricted Project Funds of $4,000 by Feb. 28, 2025
FBCO Precinct 4			$ 71,000.00		Pending-January 2025 Comissioners Court
R.A. Schaeffer Co., Inc (Inkind)	$ 26,065.40				Donation of Rail Materials
Board Approved Museum Reserve Funds/Need Replacement	$ 83,000.00				Museum Restricted Project Funds Board approved $83,000 or FBCo
	$ 170,315.40	$ 264,000.00	$ 71,000.00	$ 505,315.40	
Phase 3: Heritage Rail Cars					
Gulf Coast Chapter National Rail Heritage Society		$ 233,000.00			In-Kind Donation from GCC-NRHS
Henderson Wessendorff Foundation	$ 150,000.00		$ -		Funds can be used to move cars or develop education program./exhibt for cars
Board Approved Museum Reserve Funds/Need Replacement	$ 50,000.00	$ -			
Chapman Hauling (Inkind)		$ 68,000.00	$ -		Cost to move Cars is $268,000, will donate $68,000 inkind Services
	$ 200,000.00	$ 301,000.00		$ 501,000.00	
Phase 4: Heritage Rail Car Planned 2025 Grant Requests Refrubishment/Preservation					
Museum Funds or find funding Electric and HVAC			$ 32,000.00		
2025/2026 Award Year- Planned Summerlee Foundation			$ 15,000.00		
2025/2026 Award Year - Planned City HOT Grant			$ 10,000.00		
2025/2026 Award Year-Planned Humaninties TX			$ 15,000.00		
2025/2026 Award Year-Planned Texas Historical Foundation			$ 5,000.00		
2025/2026 Award Year-Planned Tfort Bend Jr Service League			$ 10,000.00		
2027 Requests			$ -		
	$ -	$ -	$ 87,000.00	$ -	
All Phases Total	$ 484,136.06	$ 565,000.00	$ 158,000.00	$ 1,120,136.06	
Total Capital Project	$ 1,207,136.06				

Exhibit B

Civil Drainage Plans

ROSENBERG RAILROAD MUSEUM

WITHIN

CITY OF ROSENBERG,TX

1921 AVENUE F, ROSENBERG,TX

CONSTRUCTION PLANS
FOR PROPOSED

PAVING & DRAINAGE

P & D PLANS FOR
ROSENBERG RAILROAD MUSEUM

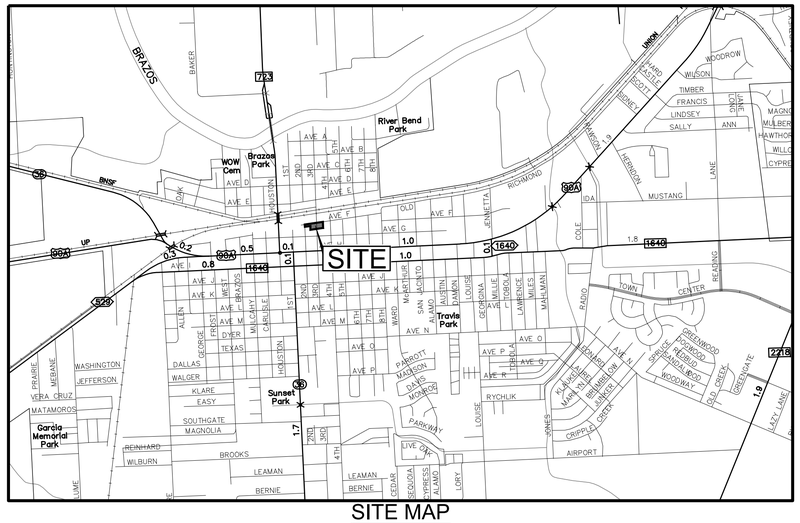

SITE MAP
SCALE: 1"=2,000'

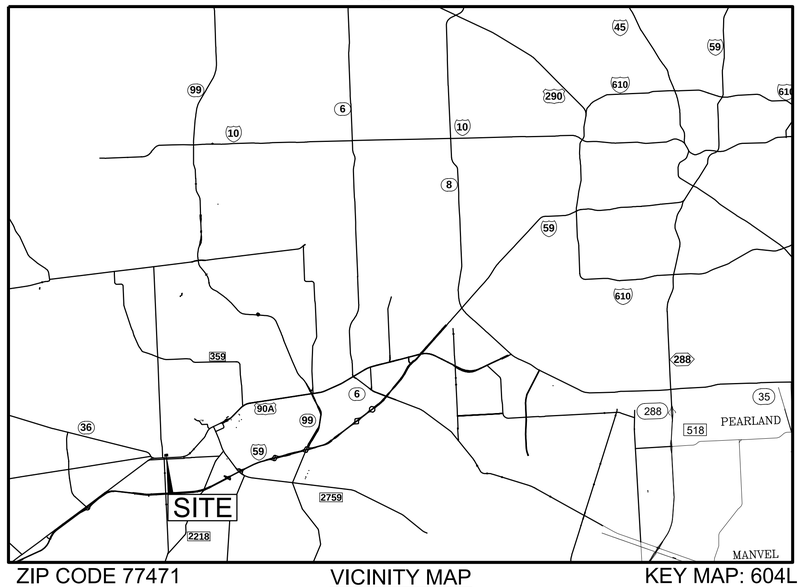

ZIP CODE 77471

VICINITY MAP
SCALE: 1"=20,000'

KEY MAP: 604L

DRAWING INDEX

SHEET NO.	TITLE
	CIVIL PLANS
C0.0	COVER
C0.1	TOPOGRAPHIC SURVEY (FOR REFERENCE ONLY)
C1.1	GENERAL NOTES
C1.2	DEMOLITION PLAN
C2.1	STORM WATER POLLUTION PREVENTION PLAN
C2.2	STORM WATER POLLUTION PREVENTION PLAN DETAILS
C3.1	DIMENSION CONTROL PLAN
C4.1	STORM SEWER & GRADING PLAN
C5.1	EXISTING DRAINAGE AREA MAP & CALCUALTIONS
C5.2	PROPOSED DRAINAGE AREA MAP & CALCULATIONS
C6.1	PAVING & STORM SEWER DETAILS

DESIGNED BY: CC
CHECKED BY: DR
DRAWN BY: CR

REV	DESCRIPTION	DATE
	ISSUE FOR PERMIT	02/07/2024
	ISSUE FOR PERMIT	04/03/2024

City of Rosenberg
Building Department
Approved for Construction

CITY APPROVED PLANS MUST BE AVAILABLE AT THE JOB SITE FOR ALL INSPECTIONS

All plans submitted for review, permitting and Work must be compliant with the 2018 International Codes (Building, Residential, Mechanical, Plumbing, Fire, Fuel Gas, Existing Building, and Swimming Pool & Spa), the 2015 International Energy Code, the 2017 National Electrical Code and Locally Adopted Ordinances

WGA
TEXAS REGISTERED ENGINEERING FIRM F-9756
2500 Tanglewilde, Suite 120
Houston, Texas 77063
713.789.1900
4526 Research Forest, Suite 360
The Woodlands, Texas 77381
713.789.1900

STATE OF TEXAS
DEAN W. RASMUSON
117638
LICENSED PROFESSIONAL ENGINEER
4/3/24

APRIL 2024
WGA PROJECT No.00671-006
CITY OF ROSENBERG PROJ#: CB-241158

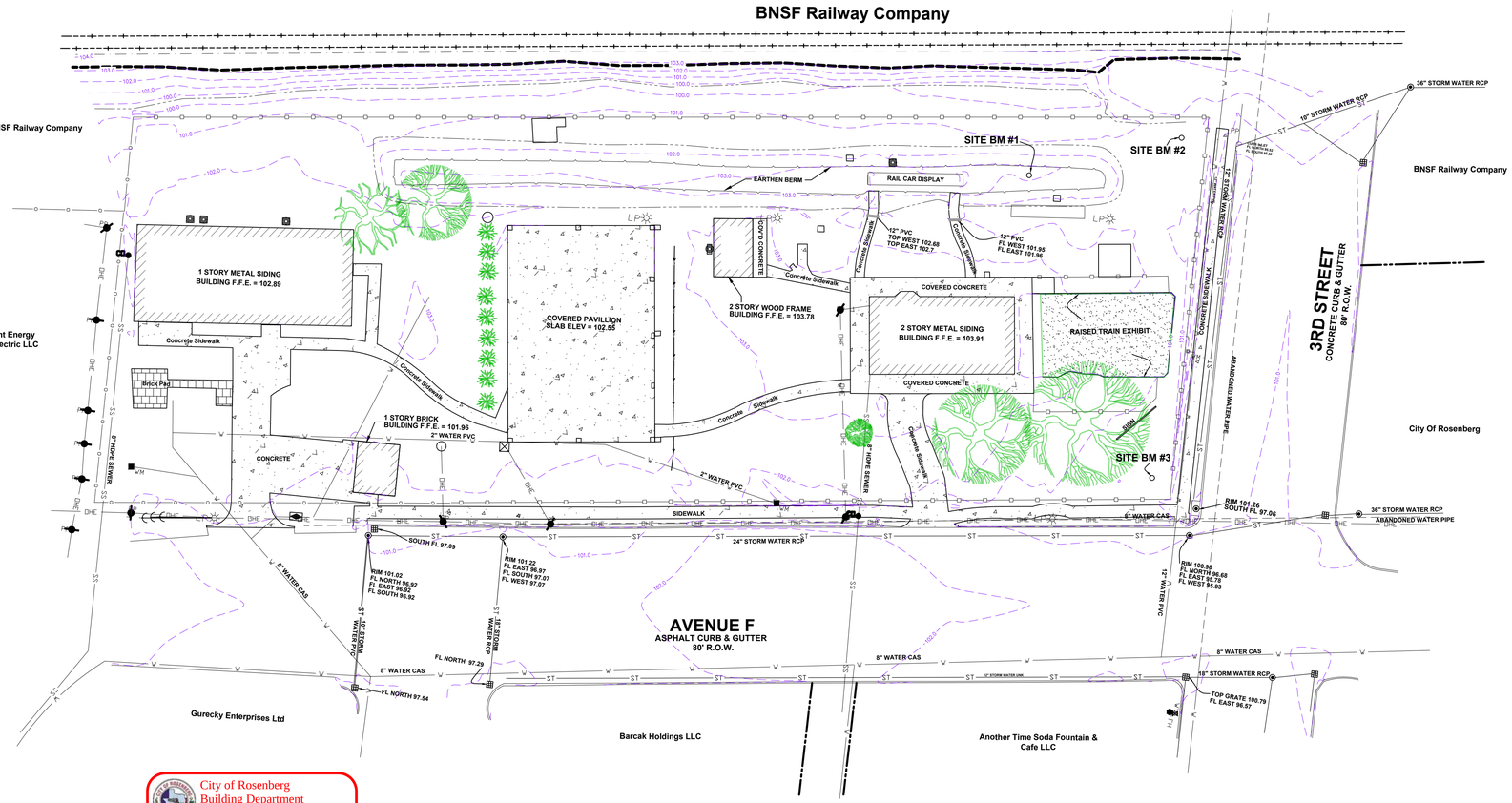

NOTES:

1. THE NORTH ORIENTATION SHOWN HEREON IS RELATIVE TO THE TEXAS STATE PLANE GRID SYSTEM, NAD-83 (2011), TX83-SCF ZONE 4204, DISTANCES SHOWN ARE GROUND DISTANCES.

2. NO PART OF THE SUBJECT PROPERTY LIES WITHIN THE SPECIAL FLOOD HAZARD AREA ACCORDING TO THE FLOOD INSURANCE RATE MAP AS COMPILED BY THE FEDERAL EMERGENCY MANAGEMENT AGENCY, NATIONAL FLOOD INSURANCE PROGRAM, MAP NUMBER 48157C0245L, EFFECTIVE DATE APRIL 2,2014 , FORT BEND COUNTY, TEXAS.

3. ELEVATIONS SHOWN ARE RELATIVE TO NGVD 88 USGS BRASS DISK SET IN CONCRETE, PUBLISHED ELEVATION = 100.5'

4. SUBJECT TO EASEMENTS, CONDITIONS, COVENANTS AND RESTRICTIONS APPLICABLE TO CITY OF ROSENBERG, TEXAS, OR AS STATED OR SHOWN HEREON, AND ANY OF RECORD WHICH MAY BE APPLICABLE.

5. THE CITY OF ROSENBERG, TEXAS DOES NOT HAVE AN OFFICIAL ZONING ORDINANCE AS OF THE DATE OF THIS SURVEY.

6. THE LOCATIONS OF UNDERGROUND UTILITIES AS SHOWN HEREON ARE BASED ON OBSERVED EVIDENCE, ABOVE GROUND STRUCTURES, GROUND MARKINGS AND DRAWINGS PROVIDED TO THE SURVEYOR BY THE CITY OF ROSENBERG UTILITY DEPARTMENT AND BY A DIG-TESS LOCATE REQUEST THROUGH THE RESPECTIVE ENTITIES. ACTUAL LOCATIONS OF UNDERGROUND UTILITIES/STRUCTURES MAY VARY FROM LOCATIONS SHOWN HEREON. NO EXCAVATIONS WERE MADE DURING THE PROGRESS OF THIS SURVEY TO LOCATE UNDERGROUND UTILITIES/STRUCTURES AND DEPTHS.

7. THE PLOT REPRESENTS A TOPOGRAPHIC SURVEY AND DOES NOT REPRESENT A BOUNDARY SURVEY OF THE SUBJECT PROPERTY.

8. TREE SIZE INDICATES DRIP LINE RADIUS AS SHOWN .

9. THE INFORMATION SHOWN HEREON SHALL BE USED FOR PLANNING PURPOSES ONLY AND NOT AS A DOCUMENT FOR CONSTRUCTION. ALL INFORMATION SHOWN HEREON SHALL BE FIELD-VERIFIED PRIOR TO COMMENCING CONSTRUCTION.

UTILITY CONTACT

EDDIE DELEON, DIRECTOR OF PUBLIC UTILITIES hdeleon@rosenbergtx.gov

SITE BENCHMARKS				
NO.	DESCRIPTION	NORTHING	EASTING	ELEV.
1	SITE BM #1 – 5/8 IRON ROD YELLOW CAP	13765276.93	2983385.05	103.10
2	SITE BM #2 – 5/8 IRON ROD YELLOW CAP	13765301.94	2983445.24	101.15
3	SITE BM #3 – 5/8 IRON ROD YELLOW CAP	13765160.61	2983454.74	101.49

LEGEND

- FIBER OPTIC CABLE
- MANHOLE
- ELECTRIC METER POLE
- ELECTRIC POLE
- ELECTRIC METER
- WATER METER
- WATER VALVE
- GAS METER
- GAS VALVE
- PHONE CABLE JUNCTION BOX
- FIRE HYDRANT
- SEWER CLEANOUT
- A/C UNIT
- TOPO LOCATION
- LIGHT POLE
- STREET SIGN
- GUY ANCHOR
- CURB / GUTTER
- CONCRETE
- EDGE OF GRAVEL
- EDGE OF PAVEMENT
- TOP OF SLOPE
- TOE OF SLOPE
- CENTERLINE OF SWALE
- CULVERT
- OHE — OVERHEAD ELECTRIC LINE
- UE — U/G ELECTRIC LINE
- W — WATERLINE
- SS — SANITARY SEWER LINE
- CHAIN LINK FENCE
- BARB WIRE FENCE
- WROUGHT IRON FENCE
- ST — STORM DRAIN
- 102.0 — CONTOUR LINE
- U/G = UNDER GROUND
- OAK TREE
- PECAN TREE
- CREPE MYRTLE TREE
- MAGNOLIA TREE

City of Rosenberg
Building Department
Approved for Construction

CITY APPROVED PLANS MUST BE AVAILABLE AT THE JOB SITE FOR ALL INSPECTIONS

All plans submitted for review, permitting and Work must be compliant with the 2018 International Codes (Building, Residential, Mechanical, Plumbing, Fire, Fuel Gas, Existing Building, and Swimming Pool & Spa), the 2015 International Energy Code, the 2017 National Electrical Code and Locally Adopted Ordinances

CERTIFICATION

THE STATE OF TEXAS

COUNTY OF FORT BEND

I, RICHARD W. HEIGES, REGISTERED PROFESSIONAL LAND SURVEYOR, NO. 6452 OF THE STATE OF TEXAS, DO HEREBY CERTIFY THAT THIS MAP SUBSTANTIALLY COMPLIES WITH THE CURRENT TEXAS SOCIETY OF PROFESSIONAL SURVEYORS MANUAL OF PRACTICE REQUIREMENTS FOR A CATEGORY 6, CONDITION 1 TOPOGRAPHIC SURVEY. NO BOUNDARY RETRACEMENT IS CERTIFIED UNDER THE SEAL AND SIGNATURE SHOWN HEREON.

DATED THIS THE 19TH DAY OF DECEMBER, 2023, A.D.

STATE OF TEXAS — RICHARD W. HEIGES — 6452 — REGISTERED PROFESSIONAL LAND SURVEYOR

FOR REVIEW

FOR REVIEW

RICHARD W. HEIGES
REGISTERED PROFESSIONAL
LAND SURVEYOR NO. 6452
RAILROAD INFRASTRUCTURE &
TERMINAL DEVELOPMENT, LLC
308 WEST 10TH STREET
LAMPASAS, TEXAS 76550

RITD
RAILROAD INFRASTRUCTURE & TERMINAL DEVELOPMENT, LLC
35505 COOPER ROAD - P.O. BOX 1087
BROOKSHIRE, TEXAS 77423
(281) 392-4850 WWW.RITD-LLC.COM FIRM 10194405

30 0 30 60

REV.	DATE	BY	DESCRIPTION

DATE 12/21/23 DRAWN DH
CHECK RG APPRV'D RH

RITD RAILROAD INFRASTRUCTURE & TERMINAL DEVELOPMENT, LLC

LOCATION AND DESCRIPTION:
1921 AVENUE F
ROSENBERG, FORT BEND COUNTY, TEXAS

ROSENBERG RAILROAD MUSEUM
ROSENBERG, TEXAS

TOPOGRAPHIC SURVEY
TSPS CATEGORY 6 SURVEY
CONDITION 1 - DETAILED

FES #:

T1.1

PROJ #: 618-1

TOPOGRAPHIC SURVEY (FOR REFERENCE ONLY)

C:\Users\rheiges\DC\ACCDocs\RITD\618 Rosenberg Railroad\Project Files\0-Design Tech Data\3-SUR\DWG's\618-1_Survey_Plot.dwg * 1/3/2024 5:18 PM * Plotted by Richard Heiges

GENERAL CONSTRUCTION NOTES

1. CONTRACTOR SHALL NOTIFY THE CITY OF ROSENBERG AT THE FOLLOWING NUMBERS AT LEAST 48 HOURS PRIOR TO STARTING CONSTRUCTION:
   -PERMITS: 832-595-3500
   -CONNECTIONS TO CITY UTILITY LINES: 832-945-7200
   -TAPS: 832-595-3400

2. CONTRACTOR SHALL VERIFY THE LOCATIONS OF EXISTING UNDERGROUND UTILITIES PRIOR TO COMMENCING CONSTRUCTION AND SHALL REPORT DISCREPANCIES TO THE ENGINEER IMMEDIATELY.

3. LOCATIONS OF EXISTING UTILITIES FOR WATERLINE, STORM SEWERS, SANITARY SEWERS, GAS LINES AND UNDERGROUND TELEPHONE CABLE AND POWER LINES ARE APPROXIMATE AND ARE BASED UPON INFORMATION OBTAINED FROM THE CITY OF ROSENBERG, UTILITY COMPANIES, AND TOPOGRAPHIC SURVEY.

4. ADE□UATE DRAINAGE SHALL BE MAINTAINED AT ALL TIMES DURING CONSTRUCTION AND ANY DRAINAGE DITCH OR STRUCTURE DISTURBED DURING CONSTRUCTION SHALL BE RESTORED TO THE SATISFACTION OF THE OWNING AUTHORITY. ALL CONSTRUCTION STORM RUNOFF SHALL COMPLY WITH THE CITY OF ROSENBERG □LINE 2014 STORM WATER MANAGEMENT PROGRAM FOR CONSTRUCTION ACTIVITIES, ALL IN COMPLIANCE WITH THE NATIONAL POLLUTANT DISCHARGE ELIMINATION SYSTEM (NPDES) RE□UIREMENTS.

5. CONTRACTOR SHALL PROVIDE TEMPORARY DRAINAGE FACILITIES TO DIRECT SURFACE DRAINAGE AWAY FROM TRENCHES AND TOWARDS OFF SITE DRAINAGE FACILITIES. PREVENT WATER FROM PONDING ON SITE AND DO NOT BLOCK DRAINAGE FROM OR DIRECT EXCESS DRAINAGE ON TO AD□ACENT PROPERTY.

6. CONTRACTOR SHALL PROTECT ALL EXISTING FACILITIES, PROPERTY, AND UNDERGROUND UTILITIES, AND SHALL REPAIR ANY DAMAGE TO THE SATISFACTION OF THE IN□URED PARTY AT NO ADDITIONAL COST TO THE OWNER OR CITY OF ROSENBERG.

7. THE CONTRACTOR SHALL BE FULLY RESPONSIBLE FOR ANY AND ALL DAMAGE TO THE EXISTING PUBLIC OR PRIVATE UTILITY LINES, INCLUDING BUT NOT LIMITED TO WATER LINES, WASTEWATER COLLECTION SYSTEMS AND STORM SEWERS, DURING CONSTRUCTION. ALL DAMAGE SHALL BE REPAIRED IN ACCORDANCE WITH CITY OF ROSENBERG DESIGN STANDARDS AND DETAILS WITH LATEST ADDENDA AND AMENDMENTS THERETO, WITH NO COST TO THE OWNER OR CITY OF ROSENBERG.

8. EXISTING PAVEMENTS, CURBS, SIDEWALKS, AND DRIVEWAYS WITHIN PUBLIC RIGHTS-OF-WAY WHICH HAVE BEEN DAMAGED OR REMOVED DURING CONSTRUCTION SHALL BE REPLACED TO THE STANDARDS OF THE APPROPRIATE REGULATORY AGENCY.

9. CONTRACTOR SHALL CONSTRUCT ALL GRAVITY SEWER LINES COMMENCING AT THE LOWEST ELEVATION AND PROCEED IN THE UPSTREAM DIRECTION. CONTRACTOR SHALL VERIFY CLEARANCES WITH ALL UNDERGROUND OBSTRUCTIONS BEFORE LAYING PIPE.

10. EXCAVATE ALL TRENCHES EVENLY TO LINE AND GRADE SHOWN.

11. CONTRACTOR SHALL KEEP TRENCH DRY AT ALL TIMES AND SHALL PROVIDE AUTOMATIC OR CONTINUOUS TRENCH PUMPS, AND WELL POINTS, IF NECESSARY TO OBTAIN DRY BEDDING CONDITIONS.

12. CONTRACTOR SHALL KEEP TRENCHES, PIPE BEDDING AND BACKFILL FREE OF DEBRIS.

13. CONTRACTOR SHALL COMPLY WITH OSHA REGULATIONS AND STATE OF TEXAS LAW CONCERNING TRENCHING AND SHORING AS SPECIFIED IN CITY OF ROSENBERG ORDINANCES.

14. INCLUDE COST OF BEDDING AND BACKFILL OF TYPE RE□UIRED FOR WATERLINES, SANITARY SEWERS, AND STORM SEWERS IN UNIT PRICE BID FOR PIPE, UNLESS OTHERWISE NOTED.

15. ALL MATERIALS FOR PROPOSED CONSTRUCTION OR REPAIR OF EXISTING FACILITIES SHALL BE NEW PRODUCTS DIRECT FROM THE FACTORY AND FREE FROM DEFECTS.

16. CONTRACTOR SHALL PROVIDE ALL TESTS, PLUGS, RISERS, GAUGES, GAUGE CALIBRATION DEVICES, TEST PUMPS AND COMPRESSORS AS NECESSARY TO MAKE TESTS.

17. WASTE MATERIALS INCLUDING PAVEMENT REMOVED DURING CONSTRUCTION, WASTE PIPING AND SUPPLIES, CONSTRUCTION DEBRIS AND EXCESS EXCAVATED MATERIAL SHALL BECOME THE PROPERTY OF THE CONTRACTOR AND SHALL BE REMOVED FROM THE PRO□ECT SITE AND DISPOSED OF PROPERLY BY THE CONTRACTOR.

18. WATER LINES, WASTEWATER COLLECTION SYSTEMS, AND DRAINAGE SYSTEMS SHALL BE CONSTRUCTED AND TESTED IN ACCORDANCE WITH THE CITY OF ROSENBERG DESIGN STANDARDS.

19. CONTRACTOR SHALL OBTAIN ALL RE□UIRED PERMITS PRIOR TO STARTING CONSTRUCTION.

20. CONTRACTOR SHALL HAVE A COPY OF ALL DRIVEWAY PERMITS ON SITE AT ALL TIMES DURING CONSTRUCTION OF DRIVES AND DRIVEWAY CULVERTS.

21. CONTRACTOR SHALL GIVE NOTICE TO ALL AUTHORIZED INSPECTORS, SUPERINTENDENTS, AND PERSONS IN CHARGE OF PUBLIC AND PRIVATE UTILITIES AFFECTED BY HIS OPERATIONS PRIOR TO STARTING WORK.

CAUTION: OVERHEAD ELECTRICAL FACILITIES

OVERHEAD LINES MAY EXIST ON THE PROPERTY. WE HAVE NOT ATTEMPTED TO MARK THOSE LINES SINCE THEY ARE CLEARLY VISIBLE, BUT YOU SHOULD LOCATE THEM PRIOR TO BEGINNING ANY CONSTRUCTION. TEXAS LAW, SECTION 752, HEALTH & SAFETY CODE, FORBIDS ACTIVITIES THAT OCCUR IN CLOSE PROXIMITY TO HIGH VOLTAGE LINES, SPECIFICALLY:

- ANY ACTIVITY WHERE PERSON OR THINGS MAY COME WITHIN SIX(6) FEET OF LIVE OVERHEAD HIGH VOLTAGE LINES□AND
- OPERATING A CRANE, DERRICK, POWER SHOVEL, DRILLING RIG, PILE DRIVER, HOISTING E□UIPMENT, OR SIMILAR APPARATUS WITHIN 10 FEET OF LIVE OVERHEAD HIGH VOLTAGE LINES. PARTIES RESPONSIBLE FOR THE WORK, INCLUDING CONTRACTORS, ARE LEGALLY RESPONSIBLE FOR THE SAFETY OF CONSTRUCTION WORKERS UNDER THIS LAW. THIS LAW CARRIES BOTH CRIMINAL AND CIVIL LIABILITY. TO ARRANGE FOR LINES TO BE TURNED OFF OR MOVED, CALL CENTERPOINT ENERGY AT 713-207-2222.

CAUTION: AT&T TEXAS/SWBT FACILITIES

- THE LOCATIONS OF AT&T TEXAS/SWBT FACILITIES ARE SHOWN IN AN APPROXIMATE WAY ONLY. THE CONTRACTOR SHALL DETERMINE THE EXACT LOCATION BEFORE COMMENCING WORK. HE AGREES TO BE FULLY RESPONSIBLE FOR ANY AND ALL DAMAGES WHICH MIGHT BE OCCASIONED BY HIS FAILURE TO EXACTLY LOCATE AND PRESERVE THESE UNDERGROUND UTILITIES.
- THE CONTRACTOR SHALL CALL 1-800-344-8377 A MINIMUM OF 48 HOURS PRIOR TO CONSTRUCTION TO HAVE UNDERGROUND LINES FIELD LOCATED.
- WHEN EXCAVATING WITHIN EIGHTEEN INCHES (18") OF THE INDICATED LOCATION OFAT&T TEXAS/SWBT FACILITIES, ALL EXCAVATIONS MUST BE ACCOMPLISHED USING NON-MECHANIZED EXCAVATION PROCEDURES. WHEN BORING THE CONTRACTOR SHALL EXPOSE THE AT&T TEXAS/SWBT FACILITIES.
- WHEN AT&T TEXAS/SWBT FACILITIES ARE EXPOSED, THE CONTRACTOR SHOULD PROVIDE SUPPORT TO PREVENT DAMAGE TO THE CONDUIT DUCTS OR CABLES. WHEN EXCAVATING NEAR TELEPHONE POLES THE CONTRACTOR SHALL BRACE THE POLE FOR SUPPORT.
- THE PRESENCE OR ABSENCE OF AT&T TEXAS/SWBT UNDERGROUND CONDUIT FACILITIES OR BURIED CABLE FACILITIES SHOWN ON THESE PLANS DOES NOT MEAN THAT THERE ARE NO DIRECT BURIED CABLES OR OTHER CABLES IN CONDUIT IN THE AREA.
- PLEASE CONTACT THE AT&T TEXAS/SWBT DAMAGE PREVENTION MANAGER MR. ROOSEVELT LEE □R. (713)567-4552 OR E-MAIL HIM AT RL7259□ ATT.COM, IF THERE ARE □UESTION ABOUT BORING OR EXCAVATING NEAR OUR AT&T TEXAS/SWBT FACILITIES

CAUTION: UNDERGROUND GAS FACILITIES

LOCATIONS OF CENTERPOINT ENERGY MAIN LINES (TO INCLUDE CENTERPOINT ENERGY, INTRASTATE PIPELINE LLC, WHERE APPLICABLE) ARE SHOWN IN AN APPROXIMATE LOCATION ONLY. SERVICE LINES ARE USUALLY NOT SHOWN. OUR SIGNATURE ON THESE PLANS ONLY INDICATES THAT OUR FACILITIES ARE SHOWN IN APPROXIMATE LOCATION. IT DOES NOT IMPLY THAT A CONFLICT ANALYSIS HAS BEEN MADE. THE CONTRACTOR SHALL CONTACT THE UTILITY COORDINATING COMMITTEE AT 1-800-669-8344 A MINIMUM OF 48 HOURS PRIOR TO CONSTRUCTION TO HAVE MAIN AND SERVICE LINE FIELD LOCATED.

WHEN CENTERPOINT ENERGY PIPE LINE MARKINGS ARE NOT VISIBLE, CALL 713-967-8037 (7:00 AM TO 4:30 PM) FOR STATUS OF LINE LOCATION RE□UEST BEFORE EXCAVATION BEGINS.

WHEN EXCAVATING WITHIN EIGHTEEN INCHES (18") OF THE INDICATED LOCATION OF CENTERPOINT ENERGY FACILITIES, ALL EXCAVATION MUST BE ACCOMPLISHED USING NON-MECHANIZED EXCAVATION PROCEDURES.

WHEN CENTERPOINT ENERGY FACILITIES ARE EXPOSED SUFFICIENT SUPPORT MUST BE PROVIDED TO THE FACILITIES TO PREVENT EXCESSIVE STRESS ON THE PIPING.

THE CONTRACTOR IS FULLY RESPONSIBLE FOR ANY DAMAGES CAUSED BY HIS FAILURE TO EXACTLY LOCATE AND PRESERVE THESE UNDERGROUND FACILITIES.

SITE PLUMBING CONSTRUCTION NOTES

1. GENERAL CONSTRUCTION NOTES APPLY TO SITE PLUMBING.

2. ALL STORM SEWERS, AND DRAINAGE SHALL BE CONSTRUCTED AND TESTED IN ACCORDANCE WITH CITY OF ROSENBERG DESIGN STANDARDS.

3. TOP OF PROPOSED MANHOLES, VALVE BOXES, ETC., SHALL BE SET TO MATCH FINISHED GRADE OR PROPOSED TOP OF PAVEMENT. TOP OF EXISTING OR PROPOSED VALVE BOXES, ETC., SHALL BE AD□USTED AS RE□UIRED PUBLIC MANHOLES. TO MATCH FINISHED GRADE OR PROPOSED TOP OF PAVEMENT.

4. ALL TRENCHES, INLETS, MANHOLES, UNDER, OR WITHIN FIVE FEET OF PAVEMENT, SHALL BE BACKFILLED WITH 2 SACK CEMENT STABILIZED SAND PER CITY OF ROSENBERG DETAILS.

5. ALL TRENCHES NOT UNDER, OR WITHIN FIVE FEET OF, PAVEMENT SHALL BE BACKFILLED PER CITY OF ROSENBERG DETAILS WITH CEMENT STABILIZED SAND, 8-INCHES MAXIMUM LOOSE LIFTS AND COMPACTED TO THE DENSITY OF NATURAL SURROUNDING SOIL, BUT NOT LESS THAN 95□ STANDARD PROCTOR DENSITY (ASTM D698).

6. MAINTAIN 6-INCH MINIMUM VERTICAL CLEARANCE AT PIPE CROSSINGS.

7. CONTRACTOR SHALL COORDINATE WITH ARCHITECTS DRAWINGS TO VERIFY LOCATION AND SIZE OF ALL ROOF DRAINS AND UTILITY CONNECTIONS. LIMITS OF PROPOSED SITE PLUMBING FACILITIES SHALL BE 5-FEET FROM EDGE OF BUILDING.

8. ALL PVC PIPE SHALL BE MADE FROM CLASS 1254-A OR 1254-B VIRGIN COMPOUNDS PER ASTM D 1784.

9. STORM SEWER SYSTEM

   A. STORM DRAIN PIPING SHALL BE AS FOLLOWS:

      1) 15-INCH AND SMALLER, SDR 26 PVC, ASTM 3034, WITH ELASTOMERIC □OINTS PER ASTM D 3212, EXCEPT SOLVENT-CEMENT □OINTS AT FITTINGS. GASKETS SHALL BE PER ASTM F 477.

      2) 18-INCH AND LARGER, RCP, ASTM C-76, CLASS III, TONGUE & GROOVE, WITH RAM-NEK □OINT SEALANT UNLESS OTHERWISE NOTED. PIPES 36-INCH AND SMALLER SHALL BE SINGLE WRAPPED WITH RAM-NEK. PIPES 42-INCH AND LARGER SHALL BE RUBBER GASKETED.

      3) ALL STORM DRAIN PIPING IN PUBLIC RIGHTS-OF-WAY OR EASEMENTS SHALL BE RCP, CLASS III, C76, WITH RUBBER GASKETED □OINTS, UNLESS OTHERWISE NOTED.

      4) PROVIDE □UICK-SET NONSHRINK MORTAR GROUT AT CONNECTIONS TO MANHOLES AND INLETS.

   B. STORM SEWER MANHOLES SHALL BE TYPE "C" PER CITY OF ROSENBERG DETAILS, SHEET C6.1 AS APPROPRIATE.

   C. FOR RCP AND CMP STORM SEWER BEDDING SHALL BE CEMENT STABILIZED SAND AND IN ACCORDANCE WITH CITY OF ROSENBERG DESIGN STANDARDS. BACKFILL SHALL BE AS PER NOTES 4 OR 5 ABOVE. (REFERENCE SHEET C6.1 FOR HDPE PIPE DETAIL.)

      1) DETAIL D100A: PIPES LESS THAN 24-INCHES IN DIAMETER

      2) DETAIL D100A: PIPES 24-INCHES THRU 36-INCHES IN DIAMETER

      3) DETAIL D100A: PIPES 42-INCHES AND LARGER IN DIAMETER

   D. UNDERGROUND ROOF DRAIN PIPING SHALL BE ASTM D3034, SDR 35, PVC, WITH ELASTOMERIC □OINTS, EXCEPT SOLVENT-CEMENT □OINTS AT FITTINGS. PROVIDE ELASTROMATIC WATERSTOP GASKET AND □UICK-SET, NONSHRINK GROUT AT CONNECTIONS TO MANHOLES AND INLETS.

   E. POLYETHYLENE PIPE MAY BE SUBSTITUTED FOR REINFORCED CONCRETE PIPE ON PRIVATE PROPERTY SUB□ECT TO THE FOLLOWING:

      1) FOR PIPES 36" AND SMALLER - CEMENT STABILIZED SAND PLACED BEFORE PIPE IS LAID, TO 7" MIN. DEPTH. FOR SEWERS 42"-60" CEMENT STABILIZED SAND PLACED BEFORE PIPE IS LAID, TO 10" MIN. DEPTH.

      2) CEMENT STABILIZED SAND, THOROUGHLY RODDED, PLACED AND COMPACTED TO 95□ STANDARD PROCTOR DENSITY 1'-0" ABOVE THE TOP OF PIPE, AFTER PIPE IS LAID.

      3) PIPE AND FITTINGS: THE TYPES OF PIPE WILL BE INDICATED ON THE DRAWINGS BY THE FOLLOWING DESCRIPTION CONFORMING TO AASHTO M 252, AASH TO M 294, AND/OR AASHTO MP6-95, LATEST EDITION. PIPE DESCRIPTION: CPP (CORRUGATED POLYETHYLENE PIPE).

      4) TYPE S (THIS PIPE SHALL HAVE A FULL CIRCULAR CROSS- SECTION, WITH AN OUTER CORRUGATED PIPE WALL AND A SMOOTH INNER LINE.)

      5) EXCEPT AS OTHERWISE RE□UIRED HEREIN OR BY THE ENGINEER, COUPLING BANDS AND OTHER □OINING SYSTEMS FOR CORRUGATED POLYETHYLENE PIPE SHALL MEET THE SOIL TIGHTNESS RE□UIREMENTS DESCRIBED IN AASHTO SECTION 26.4.2.4. "STANDARD SPECIFICATIONS FOR HIGHWAY BRIDGES". THE □OINTS MUST BE ABLE TO WITH STAND A WATER PRESSURE OF 3.5 PSI OR 8' OF HEAD.

      6) COUPLING BANDS SHALL LAP E□UALLY ON EACH OF THE PIPES BEING CONNECTED TO FORM A TIGHTLY CLOSED □OINT AFTER INSTALLATION. COUPLING BANDS MAY BE OF EITHER CORRUGATED BANDS, BELL AND SPIGOT, OR DOUBLE BELL COUPLINGS. THE CORRUGATIONS ON THE BANDS SHALL INDEX THE CORRUGATIONS IN THE PIPE ENDS TO ENGAGE THE FIRST OR SECOND CORRUGATION FROM THE END OF EACH PIPE.

      7) FITTINGS: FURNISH FITTINGS AND SPECIALS RE□UIRED FOR BENDS, END SECTIONS, BRANCHES, ACCESS MANHOLES, AND CONNECTIONS TO OTHER FITTINGS. DESIGN FITTINGS AND SPECIALS IN ACCORDANCE WITH DRAWINGS AND AASHTO M 252 OR AASHTO M 292 OF AASHTO MP6-95. FITTINGS AND SPECIALS ARE SUB□ECT SAME INTERNAL AND EXTERNAL LOADS AS STRAIGHT PIPE.

      8) PIPE FABRICATION: CORRUGATED POLYETHYLENE PIPE SHALL BE MANUFACTURED WITH EITHER ANNUAL CORRUGATIONS, OR HELICAL CORRUGATIONS OF A CLOSED PROFILE CORRUGATION MEETING THE PERFORMANCE RE□UIREMENTS OF AASHTO M 252 OF AASHTO M 294 OR AASHTO MP6-95. REFER TO PLANS FOR SPECIFIC PIPE SIZES.

      9) NO POLYETHYLENE PIPE MAY BE PLACED WITHIN EASEMENTS OR PUBLIC STREET R.O.W.

      10) CONTRACTOR SHALL INSTALL PVC SLEEVES WHERE SHOWN IN PLANS AND AS PER DETAILS ON SHEET C10. SLEEVES SHALL BE ASTM D 3034, SDR 26, PVC PIPE WITH ELASTOMERIC □OINTS PER ASTM F477.

SITE CLEARING AND GRADING CONSTRUCTION NOTES

1. ALL EARTHWORK TO BE DONE IN CONFORMANCE WITH RE□UIREMENTS OF GEOTECHNICAL ENGINEERING REPORT.

2. PRO□ECT AREA TO BE STRIPPED OF TOP SOIL TO DEPTH AS INDICATED BY SOILS ENGINEER (APPROXIMATELY 4-6 INCHES). TOP SOIL, RUBBISH, DEBRIS, AND OTHER OB□ECTIONABLE MATERIAL TO BE DISPOSED OF OFF PRO□ECT SITE.

3. CONTRACTOR TO REMOVE ALL TREES & SHRUBS INDICATED TO BE REMOVED. REMOVE STUMPS, MAIN ROOT BALL, AND ROOT SYSTEMS TO 24-INCHES BELOW EXISTING GRADE. APPLY HERBICIDE TO REMAINING STUMPS TO INHIBIT GROWTH.

4. CONTRACTOR TO CLEAR UNDERGROWTH & DEAD WOOD WITHOUT DISTURBING SUBSOIL.

5. PAVING SUBGRADE PREPARATIONS TO BE IN CONFORMANCE WITH THE SOILS REPORT, PRO□ECT SPECIFICATIONS, AND DETAILS IN PLANS.

6. CONTRACTOR SHALL CUT AND FILL SITE AS RE□UIRED TO OBTAIN FINISHED ELEVATIONS SHOWN ON PLANS. COMPACT SELECT BACKFILL MATERIAL TO 95□ STANDARD PROCTOR DENSITY AS PER ASTM D-698 AND IN CONFORMANCE WITH SOILS REPORT RE□UIREMENTS. MAXIMUM SIDE SLOPES TO BE 3:1. ALL RE□UIREMENTS OF PRO□ECT SPECIFICATIONS FOR EARTHWORK SHALL BE MET.

7. CONTRACTOR TO PROVIDE TEMPORARY MEASURES TO CONTROL STORM WATER RUN-OFF DURING CONSTRUCTION AS RE□UIRED TO MINIMIZE EROSION AND TO MEET NPDES RE□UIREMENTS.

8. EXCESS EXCAVATION SHALL BE HAULED OFF SITE AT CONTRACTORS EXPENSE. PRIOR TO FILL, THE SURFACE AREA SHALL BE CLEARED, GRUBBED, AND STRIPPED OF TOP SOIL. FILL SURFACE SHALL BE PROOF-ROLLED AND THE TOP 6-INCHES SHALL BE COMPACTED TO 95□ MAXIMUM DRY DENSITY PER ASTM D 698.

9. THE FILL SHALL BE PLACED IN LOOSE LIFTS NOT EXCEEDING 8-INCHES AND COMPACTED TO 95□ OF MAXIMUM DRY DENSITY AS DETERMINED BY ASTM D 698. THE MOISTURE CONTENT FOR COMPACTION OF SITE FILL SHALL BE AS DETERMINED BY THE SOILS ENGINEER.

10. THE ON-SITE GEOTECHNICAL ENGINEER OR HIS REPRESENTATIVE WILL MONITOR THE FILL OPERATION, IDENTIFY SOIL TYPES, AND MAKE RECOMMENDATIONS CONCERNING SELECTION AND PLACEMENT OF SOILS.

11. MAXIMUM CROSS SLOPES FOR SIDEWALKS AND A.D.A. ACCESS ROUTES SHALL NOT EXCEED 2.0□. RAMP SLOPES SHALL NOT EXCEED 1-INCH PER FOOT (8.33□). MAXIMUM SLOPES FOR HANDICAP PARKING SPACES AND ACCESS AISLES SHALL NOT EXCEED 2.0□ IN ANY DIRECTION. PUBLIC SIDEWALKS SHALL BE CONCRETE & CONSTRUCTED PER DETAILS.

SWPPP CONSTRUCTION NOTES

1. CONTRACTOR SHALL IMPLEMENT INLET PROTECTION DEVICES AND REINFORCED FILTER FABRIC BARRIER ALONG ROAD AND SIDE DITCHES AT LOCATIONS SHOWN ON THE TYPICAL STORM WATER POLLUTION PREVENTION (SWPPP) PLANS TO KEEP SILT AND/OR EXCAVATED MATERIALS FROM ENTERING INTO THE STORM WATER INLETS AND DITCHES EVENTUALLY POLLUTING THE RECEIVING STORM.
2. DURING THE EXCAVATION PHASE OF THE PRO□ECT, CONTRACTOR SHALL SCHEDULE THE WORK IN SHORT SEGMENTS SO THAT EXCAVATED MATERIAL CAN BE □UICKLY HAULED AWAY FROM THE SITE AND TO PREVENT IT FROM STAYING UNCOLLECTED ON THE EXISTING PAVEMENT. ANY LOOSE EXCAVATED MATERIAL WHICH FALL ON PAVEMENTS OR DRIVEWAYS SHALL BE SWEPT BACK INTO THE EXCAVATED AREA.
3. CONTRACTOR SHALL CLEAN UP THE EXISTING STREET INTERSECTIONS AND DRIVEWAYS DAILY, AS NECESSARY, TO REMOVE ANY EXCESS MUD, SILT OR ROCK TRACKED FROM THE EXCAVATED AREA.
4. CONTRACTOR SHALL FOLLOW GOOD HOUSEKEEPING PRACTICES DURING THE CONSTRUCTION OF THE PRO□ECT, ALWAYS CLEANING UP DIRT AND LOOSE MATERIAL AS CONSTRUCTION PROGRESSES.
5. CONTRACTOR TO INSPECT AND MAINTAIN THE AREAS LISTED BELOW AT LEAST ONCE EVERY FOURTEEN (14) CALENDAR DAYS AND WITHIN 24 HOURS OF THE END OF A STORM EVENT OF 0.5 INCHES OR GREATER.
   A) DISTURBED AREAS OF THE CONSTRUCTION SITE THAT HAVE NOT BEEN FINALLY STABILIZED.
   B) AREAS USED FOR STORAGE OF MATERIALS THAT ARE EXPOSED TO PRECIPITATION.
   C) STRUCTURAL CONTROL MEASURES.
   D) LOCATIONS WHERE VEHICLES ENTER OR EXIT THE SITE.
6. CONTRACTOR TO BE RESPONSIBLE TO MAINTAIN EXISTING DITCHES AND/OR CULVERTS FOR UNOBSTRUCTED DRAINAGE AT ALL TIMES. WHERE SODDING IS DISTURBED BY EXCAVATION ON BACKFILLING OPERATIONS, SUCH AREAS SHALL BE REPLACED BY SEEDING OR SODDING. SLOPES 4:1 OR STEEPER SHALL BE REPLACED BY BLOCK SODDING.

ABBREVIATIONS

B-B	□BACK TO BACK	NG	□NATURAL GROUND
BL	□BUILDING LINE	PROP	□PROPOSED
BOC	□BACK OF CUR	ROW	□RIGHT-OF-WAY
BBR	□BOTTOM OF RAM	RT	□RIGHT
PBW	□BASE OF WALL	R	□RADIUS
ESMT	□EASMENT	SS	□SANITARY SEWER
EX	□EXISTING	SSE	□SANITARY SEWER EASEMENT
FL	□FLOWLINE	STM SWR	□STORM SEWER
G	□GUTTER	TC	□TOP OF CURB
HG	□HYDRAULIC GRADIENT	TG	□TOP OF GRATE
HP	□HIGH POINT	TP	□TOP OF PAVEMENT
□B	□□UNCTION BOX	TR	□TOP OF RAMP
LF	□LINEAR FEET	TW	□TOP OF WALK OR WALL
LT	□LEFT	UE	□UTILITY EASMENT
ME	□MATCH EXISTING	WL	□WATERLINE
MH	□MANHOLE	WS&D	□WATER, SANITARY & DRAINAGE

City of Rosenberg
Building Department
Approved for Construction

CITY APPROVED PLANS MUST BE AVAILABLE AT THE JOB SITE FOR ALL INSPECTIONS

All plans submitted for review, permitting and Work must be compliant with the 2018 International Codes (Building, Residential, Mechanical, Plumbing, Fire, Fuel Gas, Existing Building, and Swimming Pool & Spa), the 2015 International Energy Code, the 2017 National Electrical Code and Locally Adopted Ordinances

RITD
RAILROAD INFRASTRUCTURE & TERMINAL DEVELOPMENT, LLC
35505 COOPER RD. · P.O. BOX 1087
BROOKSHIRE, TEXAS 77423
(281) 392-4850 WWW.RITD-LLC.COM FIRM F-16264

REV	DATE	DESCRIPTION

BENCHMARKS:

BENCHMARK #1
ELEVATION - 103.10'
SITE BM #1 - 5/8 IRON ROD YELLOW CAP

BENCHMARK #2
ELEVATION - 101.15'
SITE BM #2 - 5/8 IRON ROD YELLOW CAP

BENCHMARK #3
ELEVATION - 101.49'
SITE BM #3 - 5/8 IRON ROD YELLOW CAP

FLOOD PLAIN NOTE:

THIS SUBJECT TRACT LIES IN UNSHADED ZONE "X" (AREAS DETERMINED TO BE OUTSIDE THE 100-YEAR FLOODPLAIN) AS DELINEATED ON THE FLOOD INSURANCE MAP FOR FORT BEND COUNTY, TEXAS AND INCORPORATED AREAS, MAP NO. 48157C0245L DATED APRIL 2, 2014.
THE NEAREST AND HIGHEST CURRENTLY KNOWN AND RELEVANT 1% ANNUAL CHANCE FLOOD ELEVATION APPEARS TO BE 98.79 FT (NAVD 1988) IN DRY CREEK. THE NEAREST AND HIGHEST CURRENTLY KNOWN AND RELEVANT 0.2% ANNUAL CHANCE FLOOD ELEVATION APPEARS TO BE 99.00 FT (NAVD, 1988) ACCORDING TO CROSS SECTION LINE "AE" ALONG DRY CREEK, REVISED JANUARY 29, 2021 FLOOD INSURANCE STUDY NUMBER 48157CV002C.

RITD Railroad Infrastructure & Terminal Development, LLC

SCALE: N/A
DRAWN: MM & CR
CHECK: CC & DR
DESIGN: CC

WGA
CONSULTING ENGINEERS
WARD, GETZ & ASSOCIATES, PLLC
TEXAS REGISTERED ENGINEERING FIRM F-9756
2500 Tanglewilde, Suite 120
Houston, Texas 77063
713.789.1900

ROSENBERG RAILROAD MUSEUM

GENERAL NOTES

SHEET
C1.1

STATE OF TEXAS
DEAN W. RASMUSON
117638
LICENSED PROFESSIONAL ENGINEER
4/3/24

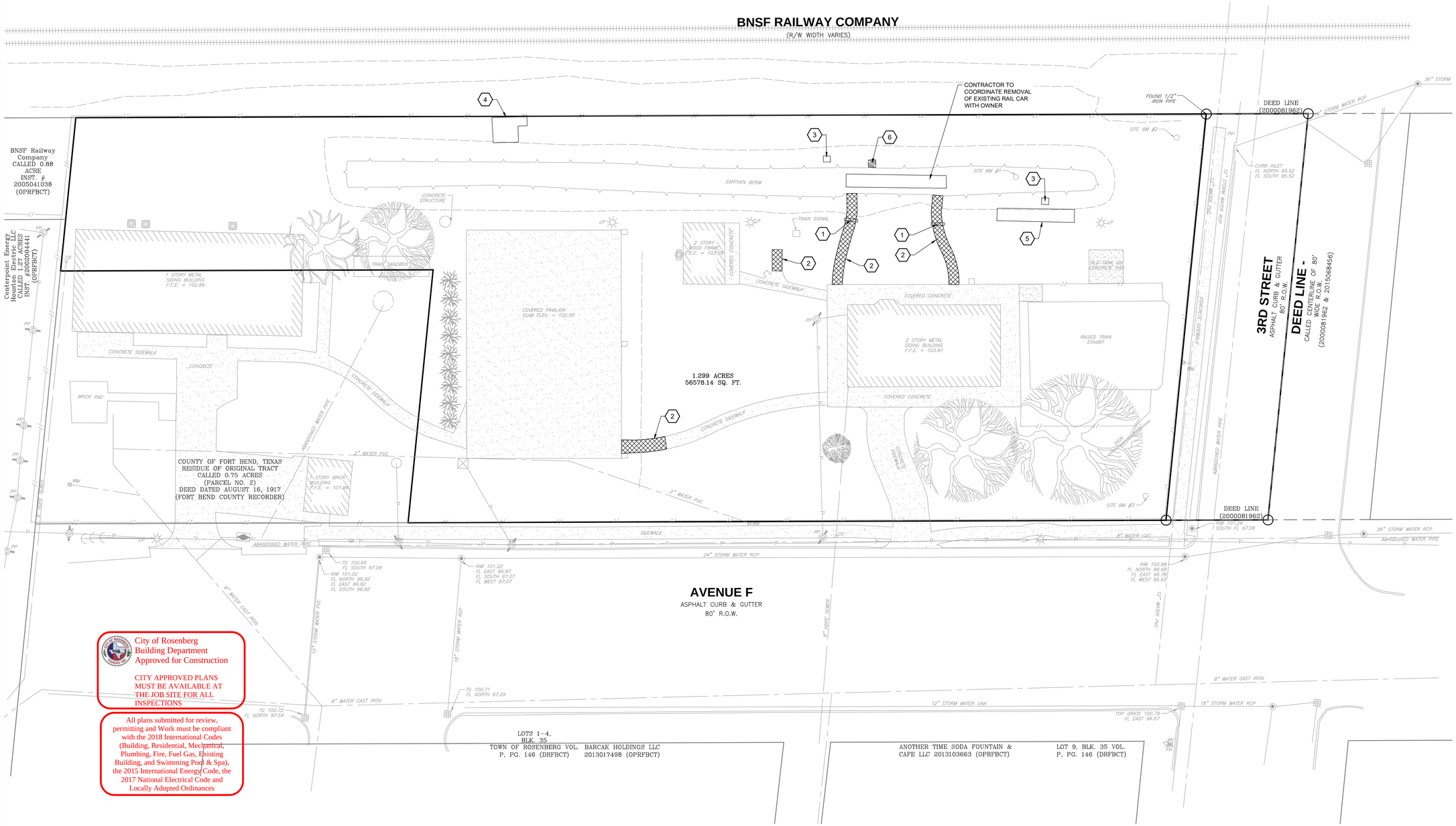

City of Rosenberg
Building Department
Approved for Construction

CITY APPROVED PLANS MUST BE AVAILABLE AT THE JOB SITE FOR ALL INSPECTIONS

All plans submitted for review, permitting and Work must be compliant with the 2018 International Codes (Building, Residential, Mechanical, Plumbing, Fire, Fuel Gas, Existing Building, and Swimming Pool & Spa), the 2015 International Energy Code, the 2017 National Electrical Code and Locally Adopted Ordinances

0 20 40
SCALE: 1" = 20'

SITE DEMOLITION NOTES:

ALL EXISTING FACILITIES, AS DEPICTED ON THE TOPOGRAPHIC SURVEY, BOTH ABOVE GROUND AND UNDERGROUND, TO BE REMOVED BY CONTRACTOR UNLESS OTHERWISE NOTED. CONTRACTOR TO CONTACT 811 (CITY OF ROSENBERG) OR LOCAL E□UIVALENT PRIOR TO DIGGING OR REMOVAL OF ANY WET OR DRY UTILITIES.

CONTRACTOR TO COORDINATE GAS, ELECTRIC, AND COMMUNICATION REMOVAL/RELOCATION WITH THE PROPER PUBLIC & PRIVATE □URISDICTIONAL AGENCIES. WGA DOES NOT GUARANTEE THE LOCATION OR STATUS OF ANY EXISTING UTILITIES SHOWN.

DEMOLITION KEYNOTES

STORM SEWER DEMOLITION:

1. STORM SEWER TO BE REMOVED

PAVEMENT DEMOLITION:

2. CONCRETE PAVING TO BE REMOVED

MISCELLANEOUS DEMOLITION:

3. TRAIN SIGNAL TO BE REMOVED
4. WOOD DECK TO BE REMOVED
5. EXISTING TRACK SECTION TO BE REMOVED
6. EXISTING AIR CONDITIONING UNIT TO BE REMOVED

RITD
RAILROAD INFRASTRUCTURE & TERMINAL DEVELOPMENT, LLC
35505 COOPER RD. · P.O. BOX 1087
BROOKSHIRE, TEXAS 77423
(281) 392-4850 WWW.RITD-LLC.COM FIRM F-16264

REV	DATE	DESCRIPTION

BENCHMARKS:

BENCHMARK #1
ELEVATION - 103.10'
SITE BM #1 - 5/8 IRON ROD YELLOW CAP

BENCHMARK #2
ELEVATION - 101.15'
SITE BM #2 - 5/8 IRON ROD YELLOW CAP

BENCHMARK #3
ELEVATION - 101.49'
SITE BM #3 - 5/8 IRON ROD YELLOW CAP

FLOOD PLAIN NOTE:

THIS SUBJECT TRACT LIES IN UNSHADED ZONE "X" (AREAS DETERMINED TO BE OUTSIDE THE 100-YEAR FLOODPLAIN) AS DELINEATED ON THE FLOOD INSURANCE MAP FOR FORT BEND COUNTY, TEXAS AND INCORPORATED AREAS, MAP NO. 48157C0245L DATED APRIL 2, 2014.
THE NEAREST AND HIGHEST CURRENTLY KNOWN AND RELEVANT 1% ANNUAL CHANCE FLOOD ELEVATION APPEARS TO BE 98.79 FT (NAVD 1988) IN DRY CREEK. THE NEAREST AND HIGHEST CURRENTLY KNOWN AND RELEVANT 0.2% ANNUAL CHANCE FLOOD ELEVATION APPEARS TO BE 99.00 FT (NAVD, 1988) ACCORDING TO CROSS SECTION LINE "AE" ALONG DRY CREEK, REVISED JANUARY 29, 2021 FLOOD INSURANCE STUDY NUMBER 48157CV002C.

RITD Railroad Infrastructure & Terminal Development, LLC

SCALE: 1"=20' DRAWN: MM & CR
CHECK: CC & DR DESIGN: CC

WGA
CONSULTING ENGINEERS
WARD, GETZ & ASSOCIATES, PLLC
TEXAS REGISTERED ENGINEERING FIRM F-9756
2500 Tanglewilde, Suite 120
Houston, Texas 77063
713.789.1900

ROSENBERG RAILROAD MUSEUM

DEMOLITION PLAN

SHEET
C1.2

STATE OF TEXAS
DEAN W. RASMUSON
117638
LICENSED PROFESSIONAL ENGINEER
4/3/24

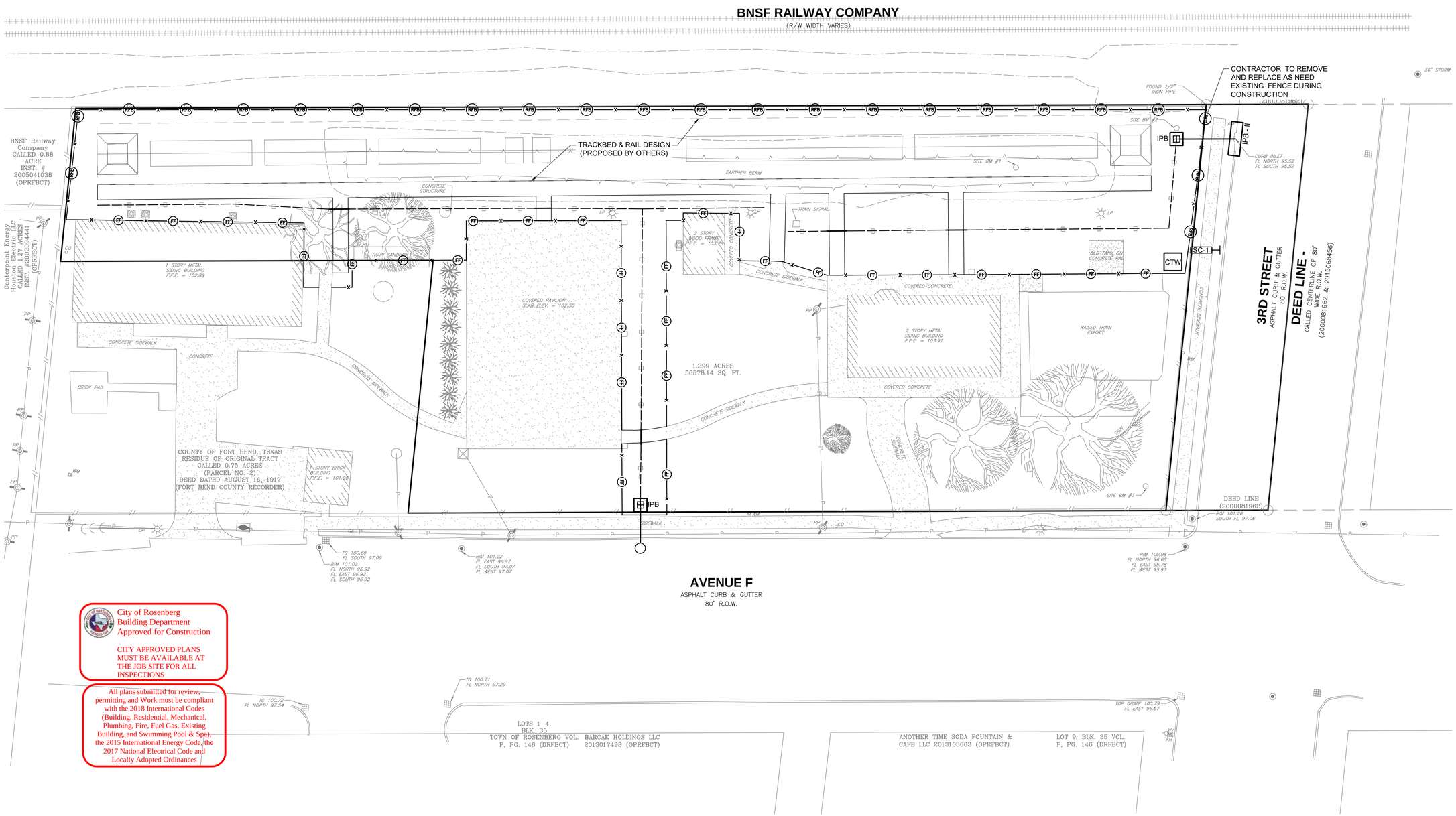

City of Rosenberg
Building Department
Approved for Construction

CITY APPROVED PLANS MUST BE AVAILABLE AT THE JOB SITE FOR ALL INSPECTIONS

All plans submitted for review, permitting and Work must be compliant with the 2018 International Codes (Building, Residential, Mechanical, Plumbing, Fire, Fuel Gas, Existing Building, and Swimming Pool & Spa), the 2015 International Energy Code, the 2017 National Electrical Code and Locally Adopted Ordinances

SWPPP NOTE:

ANY OFF-SITE STAGING AREA UTILIZED BY THE OPERATOR OF THIS SITE MUST BE INCLUDED IN THE SWPPP NARRATIVE PLAN AND TO SWPPP SITE PLAN AS RE□UIRED BY THE TPDES TEXAS GENERAL PERMIT TXR150000 (SECTION F). ANY SUCH AREA INCLUDED IN THE SWPPP WILL BE TREATED BY THE OPERATOR AS ANY OTHER PART OF THE CONSTRUCTION ACTIVITY FOR THE PURPOSES OF STORM WATER POLLUTION PREVENTION.

EROSION CONTROL SCHEDULE AND SE□UENCING

I. ROUGH GRADING
GRADING CONSTRUCTION ENTRANCE/EXIT, SILT FENCE PROTECTION, AND STONE OVERFLOW STRUCTURES SHALL BE INSTALLED PRIOR TO THE INITIATION OF ROUGH GRADING, AS NEEDED.

II. UTILITY INSTALLATION
ALL PRIOR EROSION CONTROL MEASURES INSTALLED ABOVE TO BE MAINTAINED AS NECESSARY DURING UTILITY INSTALLATION. INLET PROTECTION SHALL BE INSTALLED AS STORM DRAINAGE SYSTEM IS CONSTRUCTED.

III. PAVING
ALL PRIOR EROSION CONTROL MEASURES INSTALLED ABOVE TO BE MAINTAINED AS NECESSARY DURING PAVING AND THROUGHOUT THE REMAINDER OF THE PROJECT.

IV. FINAL GRADING/SOIL
STABILIZATION/ ALL TEMPORARY EROSION CONTROL MEASURES TO BE REMOVED AT THE CONCLUSION OF THE PROJECT ONCE FINAL STABILIZATION HAS BEEN ACHIEVED.

SWPPP LEGEND:

SC-1	STABILIZED CONSTRUCTION EXIT
x—(FF)—x—	FILTER FABRIC FENCE
x—(RFB)—x—	REINFORCED FILTER FABRIC BARRIER
IPB	INLET PROTECTION BARRIER (STAGE 1 & 2)
IPB - II	INLET PROTECTION BARRIER TYPE II
CTW	CONCRETE TRUCK WASHOUT AREA

RITD
RAILROAD INFRASTRUCTURE & TERMINAL DEVELOPMENT, LLC
35505 COOPER RD. · P.O. BOX 1087
BROOKSHIRE, TEXAS 77423
(281) 392-4850 WWW.RITD-LLC.COM FIRM F-16264

REV	DATE	DESCRIPTION

BENCHMARKS:

BENCHMARK #1
ELEVATION - 103.10'
SITE BM #1 - 5/8 IRON ROD YELLOW CAP

BENCHMARK #2
ELEVATION - 101.15'
SITE BM #2 - 5/8 IRON ROD YELLOW CAP

BENCHMARK #3
ELEVATION - 101.49'
SITE BM #3 - 5/8 IRON ROD YELLOW CAP

FLOOD PLAIN NOTE:

THIS SUBJECT TRACT LIES IN UNSHADED ZONE "X" (AREAS DETERMINED TO BE OUTSIDE THE 100-YEAR FLOODPLAIN) AS DELINEATED ON THE FLOOD INSURANCE MAP FOR FORT BEND COUNTY, TEXAS AND INCORPORATED AREAS, MAP NO. 48157C0245L DATED APRIL 2, 2014.
THE NEAREST AND HIGHEST CURRENTLY KNOWN AND RELEVANT 1% ANNUAL CHANCE FLOOD ELEVATION APPEARS TO BE 98.79 FT (NAVD 1988) IN DRY CREEK. THE NEAREST AND HIGHEST CURRENTLY KNOWN AND RELEVANT 0.2% ANNUAL CHANCE FLOOD ELEVATION APPEARS TO BE 99.00 FT (NAVD, 1988)ACCORDING TO CROSS SECTION LINE "AE" ALONG DRY CREEK, REVISED JANUARY 29, 2021 FLOOD INSURANCE STUDY NUMBER 48157CV002C.

RITD Railroad Infrastructure & Terminal Development, LLC

SCALE: 1"=20' DRAWN: MM & CR
CHECK: CC & DR DESIGN: CC

WGA
CONSULTING ENGINEERS
WARD, GETZ & ASSOCIATES, PLLC
TEXAS REGISTERED ENGINEERING FIRM F-9756
2500 Tanglewilde, Suite 120
Houston, Texas 77063
713.789.1900

ROSENBERG RAILROAD MUSEUM

STORM WATER POLLUTION PRE□ENTION PLAN

SHEET
C2.1

STATE OF TEXAS
DEAN W. RASMUSON
117638
LICENSED PROFESSIONAL ENGINEER
4/3/24

J:\1704\1601\Fort Bend County Standards\Fort Bend County STD\DONE\FBC STORM WATER POLLUTION PREVENTION PLAN DETAILS\STORM_WATER_POLLUTION_PREVENTION_PLAN_DETAILS.dwg

1. SET POSTS AT REQUIRED SPACING
2. EXCAVATE A 6"x6" TRENCH UPSLOPE ALONG THE LINE OF POSTS AND SECURE WIRE FENCE TO POSTS.
3. ATTACH FILTER FABRIC TO POSTS AND EXTEND IT INTO THE TRENCH. BACKFILL AND COMPACT THE EXCAVATED SOIL.

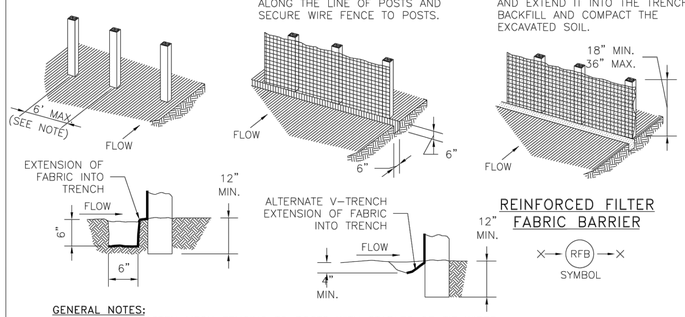

REINFORCED FILTER FABRIC BARRIER

RFB — SYMBOL

GENERAL NOTES:

1. SECURELY FASTEN MESH FENCING TO POSTS WITH STAPLES OR TIE WIRES.
2. SECURELY FASTEN FILTER FABRIC TO MESH FENCING.
3. WHEN TWO SECTIONS OF FILTER FABRIC ADJOIN EACH OTHER, OVERLAP 6 INCHES AT A POST, FOLD TOGETHER, AND ATTACH TO A POST.
4. REMOVE SEDIMENT DEPOSITS WHEN SILT REACHES ONE-THIRD OF THE HEIGHT OF THE FENCE IN DEPTH.
5. SILT FENCE MINIMUM 2' BEHIND CURB.

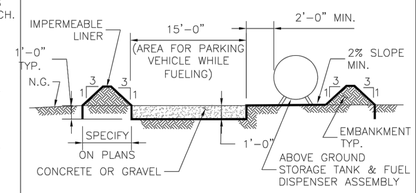

ABOVE GROUND TEMP. VEHICLE & EQUIPMENT FUELING AREA WITH TANK

TFA — SYMBOL

GENERAL NOTES:

1. THE SIZE OF TANK FOUNDATION AREA DEPENDS ON THE SIZE OF ABOVE GROUND STORAGE TANK AND DISPENSER ASSEMBLY.
2. PROVIDE A MINIMUM SLOPE OF 2 % TOWARD THE SUMP PIT.
3. INSTALL IMPERMEABLE LINER AS PER MANUFACTURER'S RECOMMENDATIONS.

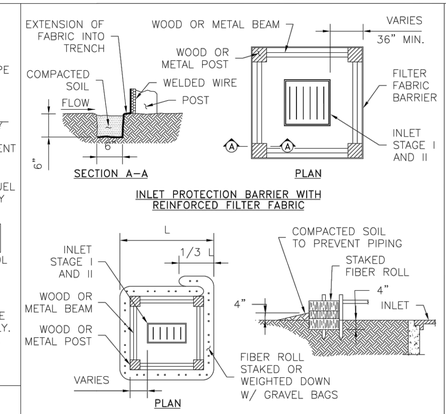

GENERAL NOTES:

1. FIBER ROLLS WILL BE UTILIZED ONLY WHEN SITE CONDITIONS DO NOT PERMIT THE USE OF FILTER FABRIC BARRIER, AND AS APPROVED BY THE ENGINEER.

INLET PROTECTION BARRIERS FOR STAGE I INLETS

IPB — SYMBOL

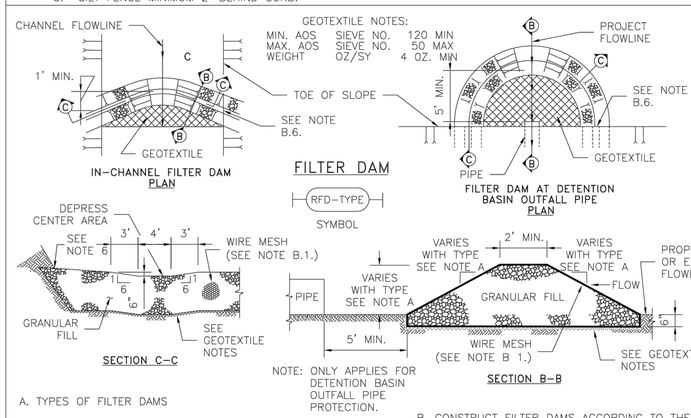

FILTER DAM

RFD-TYPE — SYMBOL

NOTE: ONLY APPLIES FOR DETENTION BASIN OUTFALL PIPE PROTECTION.

A. TYPES OF FILTER DAMS

1. TYPE 1 (NON-REINFORCED)
   a. HEIGHT – 18-24 INCHES. MEASURE VERTICALLY FROM EXISTING GROUND TO TOP OF FILTER DAM.
   b. TOP WIDTH – 2 FEET (MINIMUM)
   c. SLOPES – 2:1 (MAXIMUM).
2. TYPE 2 (REINFORCED).
   a. HEIGHT – 18-36 INCHES. MEASURE VERTICALLY FROM EXISTING GROUND TO TOP OF FILTER DAM.
   b. TOP WIDTH – 2 FEET (MINIMUM).
   c. SLOPES – 2:1 (MAXIMUM).
3. TYPE 3 (REINFORCED)
   a. HEIGHT – 36-48 INCHES. MEASURE VERTICALLY FROM EXISTING GROUND TO TOP OF FILTER DAM.
   b. TOP WIDTH – 2 FEET (MINIMUM).
   c. SLOPES – 3:1 (MAXIMUM).
4. TYPE 4 (GABION)
   a. HEIGHT – 30 INCHES (MINIMUM). MEASURE VERTICALLY FROM EXISTING GROUND TO TOP OF FILTER DAM.
   b. TOP WIDTH – 2 FEET (MINIMUM).
5. TYPE 5. AS SHOWN ON THE PLANS.

B. CONSTRUCT FILTER DAMS ACCORDING TO THE FOLLOWING CRITERIA UNLESS SHOWN OTHERWISE ON THE PLANS.

1. TYPE 2 AND 3 FILTER DAMS: SECURE WITH 20 GAUGE GALVANIZED WOVEN WIRE MESH WITH 1 INCH DIAMETER HEXAGONAL OPENINGS.
2. PLACE GRANULAR FILL ON THE WIRE MESH TO HEIGHT AND SLOPES SHOWN ON PLANS OR AS SPECIFIED BY THE ENGINEER.
   a. 3-5 INCHES FOR ROCK FILTER DAM TYPES 1, 2 AND 4.
   b. 4-8 INCHES FOR ROCK FILTER DAM TYPE REFER TO GRANULAR FILL IN SPECIFICATION SECTION No. 02378 RIPRAP AND GRANULAR FILL.
3. FOLD WIRE MESH AT UPSTREAM SIDE OVER GRANULAR FILL AND TIGHTLY SECURED TO ITSELF ON THE DOWNSTREAM SIDE USING WIRE TIES OR HOG RINGS.
4. IN STREAMS: SECURE OR STAKE MESH TO STREAM BED PRIOR TO AGGREGATE PLACEMENT.
5. SEE HCFCD SPECIFICATION SECTION NO. 02364-FILTER DAMS.
6. EMBED ONE FOOT MINIMUM INTO SLOPE AND RAISE ONE FOOT HIGHER THAN CENTER OF DEPRESSED AREA AT SLOPE.

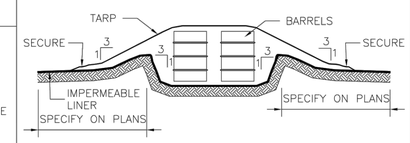

BARREL STORAGE AREA

BSA — SYMBOL

GENERAL NOTES:

1. ALTERNATIVELY, STORE BARRELS IN AN ENCLOSED BUILDING OR SHED.
2. INSTALL IMPERMEABLE LINER AS PER MANUFACTURER'S RECOMMENDATIONS. 60 mil MINIMUM.
3. CONSTRUCT BERMED AREA WITH VOLUME GREATER THAN OR EQUAL TO 110% VOLUME OF BARRELS.

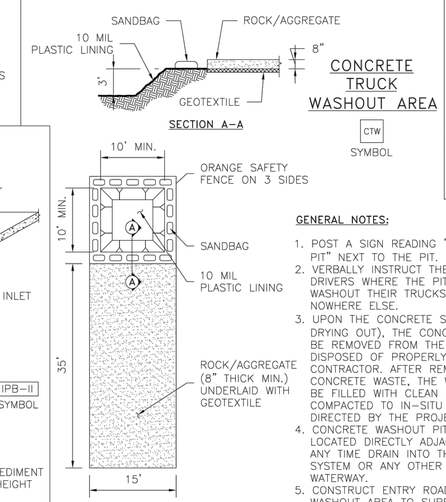

CONCRETE TRUCK WASHOUT AREA

CTW — SYMBOL

GENERAL NOTES:

1. POST A SIGN READING "CONCRETE WASHOUT PIT" NEXT TO THE PIT.
2. VERBALLY INSTRUCT THE CONCRETE TRUCK DRIVERS WHERE THE PIT IS AND TO WASHOUT THEIR TRUCKS IN THE PIT AND NOWHERE ELSE.
3. UPON THE CONCRETE SETTING UP (CURING, DRYING OUT), THE CONCRETE WASTE SHALL BE REMOVED FROM THE PROJECT SITE AND DISPOSED OF PROPERLY BY THE CONTRACTOR. AFTER REMOVAL OF THE CONCRETE WASTE, THE WASHOUT PIT SHALL BE FILLED WITH CLEAN FILL MATERIAL AND COMPACTED TO IN-SITU CONDITIONS, OR AS DIRECTED BY THE PROJECT SPECIFICATIONS.
4. CONCRETE WASHOUT PITS SHALL NOT BE LOCATED DIRECTLY ADJACENT TO, NOR AT ANY TIME DRAIN INTO THE STORM SEWER SYSTEM OR ANY OTHER SWALE, DITCH, OR WATERWAY.
5. CONSTRUCT ENTRY ROAD AND BOTTOM OF WASHOUT AREA TO SUPPORT EXPECTED LOADINGS FROM TRUCKS EQUIPMENT.

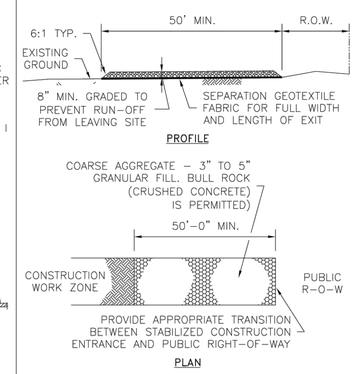

STABILIZED CONSTRUCTION ACCESS

SC-1 — SYMBOL

GENERAL NOTES:

1. MINIMUM LENGTH IS AS SHOWN ON CONSTRUCTION DRAWINGS OR 50 FEET, WHICHEVER IS MORE.
2. CONSTRUCT AND MAINTAIN CONSTRUCTION EXIT WITH CONSTANT WIDTH ACROSS ITS LENGTH, INCLUDING ALL POINTS OF INGRESS OR EGRESS.
3. UNLESS SHOWN ON THE CONSTRUCTION DRAWINGS, STABILIZATION FOR OTHER AREAS WILL HAVE THE SAME AGGREGATE THICKNESS AND WIDTH REQUIREMENTS AS THE STABILIZED CONSTRUCTION EXIT.
4. WHEN SHOWN ON THE CONSTRUCTION DRAWINGS, WIDEN OR LENGTHEN STABILIZED AREA TO ACCOMMODATE A TRUCK WASHING AREA. PROVIDE OUTLET SEDIMENT TRAP FOR THE TRUCK WASHING AREA.
5. PROVIDE PERIODIC TOP DRESSING WITH ADDITIONAL COARSE AGGREGATE TO MAINTAIN THE REQUIRED DEPTH OR WHEN SURFACE BECOMES PACKED WITH MUD.
6. PERIODICALLY TURN AGGREGATE TO EXPOSE A CLEAN DRIVING SURFACE.
7. MINIMUM 14' WIDTH FOR ONE WAY TRAFFIC AND 20' WIDTH FOR TWO WAY TRAFFIC.

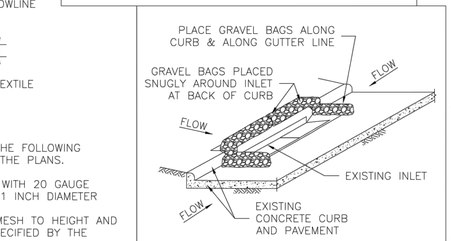

INLET PROTECTION BARRIERS FOR STAGE II INLETS

IPB-II — SYMBOL

GENERAL NOTES:

1. REMOVE SEDIMENT DEPOSIT WHEN THE SEDIMENT HAS ACCUMULATED TO ONE-THIRD THE HEIGHT OF THE BARRIER.
2. GRAVEL BAGS SHALL NOT BLOCK THROAT OF INLET UNLESS DIRECTED BY ENGINEER.

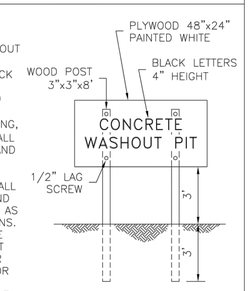

SIGN DETAIL (OR EQUIVALENT)

NO.	REVISIONS	DATE	NAME
1	ORIGINAL STANDARD ISSUED	2-1-22	RJS
2			
3			
4			
5			

FORT BEND COUNTY
ENGINEERING DEPARTMENT

THE STATE OF TEXAS — FORT BEND COUNTY

PROJECT TITLE:		
DRAWN BY: INIT		FBCED STANDARD
CK'D BY: INIT	SHEET DESCRIPTION: STORM WATER POLLUTION	54
SCALE: NONE	PREVENTION PLAN DETAILS	SHEET NO:
DATE: 2-1-22	APPROVED BY:	/

City of Rosenberg
Building Department
Approved for Construction

CITY APPROVED PLANS MUST BE AVAILABLE AT THE JOB SITE FOR ALL INSPECTIONS

All plans submitted for review, permitting and Work must be compliant with the 2018 International Codes (Building, Residential, Mechanical, Plumbing, Fire, Fuel Gas, Existing Building, and Swimming Pool & Spa), the 2015 International Energy Code, the 2017 National Electrical Code and Locally Adopted Ordinances

RITD
RAILROAD INFRASTRUCTURE & TERMINAL DEVELOPMENT, LLC
35505 COOPER RD. · P.O. BOX 1087
BROOKSHIRE, TEXAS 77423
(281) 392-4850 WWW.RITD-LLC.COM FIRM F-16264

REV	DATE	DESCRIPTION

BENCHMARKS:

BENCHMARK #1
ELEVATION - 103.10'
SITE BM #1 - 5/8 IRON ROD YELLOW CAP

BENCHMARK #2
ELEVATION - 101.15'
SITE BM #2 - 5/8 IRON ROD YELLOW CAP

BENCHMARK #3
ELEVATION - 101.49'
SITE BM #3 - 5/8 IRON ROD YELLOW CAP

FLOOD PLAIN NOTE:

THIS SUBJECT TRACT LIES IN UNSHADED ZONE "X" (AREAS DETERMINED TO BE OUTSIDE THE 100-YEAR FLOODPLAIN) AS DELINEATED ON THE FLOOD INSURANCE MAP FOR FORT BEND COUNTY, TEXAS AND INCORPORATED AREAS, MAP NO. 48157C0245L DATED APRIL 2, 2014.
THE NEAREST AND HIGHEST CURRENTLY KNOWN AND RELEVANT 1% ANNUAL CHANCE FLOOD ELEVATION APPEARS TO BE 98.79 FT (NAVD 1988) IN DRY CREEK. THE NEAREST AND HIGHEST CURRENTLY KNOWN AND RELEVANT 0.2% ANNUAL CHANCE FLOOD ELEVATION APPEARS TO BE 99.00 FT (NAVD, 1988) ACCORDING TO CROSS SECTION LINE "AE" ALONG DRY CREEK, REVISED JANUARY 29, 2021 FLOOD INSURANCE STUDY NUMBER 48157CV002C.

RITD Railroad Infrastructure & Terminal Development, LLC

SCALE: N/A DRAWN: MM & CR
CHECK: CC & DR DESIGN: CC

WGA
CONSULTING ENGINEERS
WARD, GETZ & ASSOCIATES, PLLC
TEXAS REGISTERED ENGINEERING FIRM F-9756
2500 Tanglewilde, Suite 120
Houston, Texas 77063
713.789.1900

ROSENBERG RAILROAD MUSEUM

STORM WATER POLLUTION PRE□ ENTION PLAN DETAILS

SHEET
C2.2

STATE OF TEXAS — DEAN W. RASMUSON — 117638 — LICENSED PROFESSIONAL ENGINEER
4/3/24

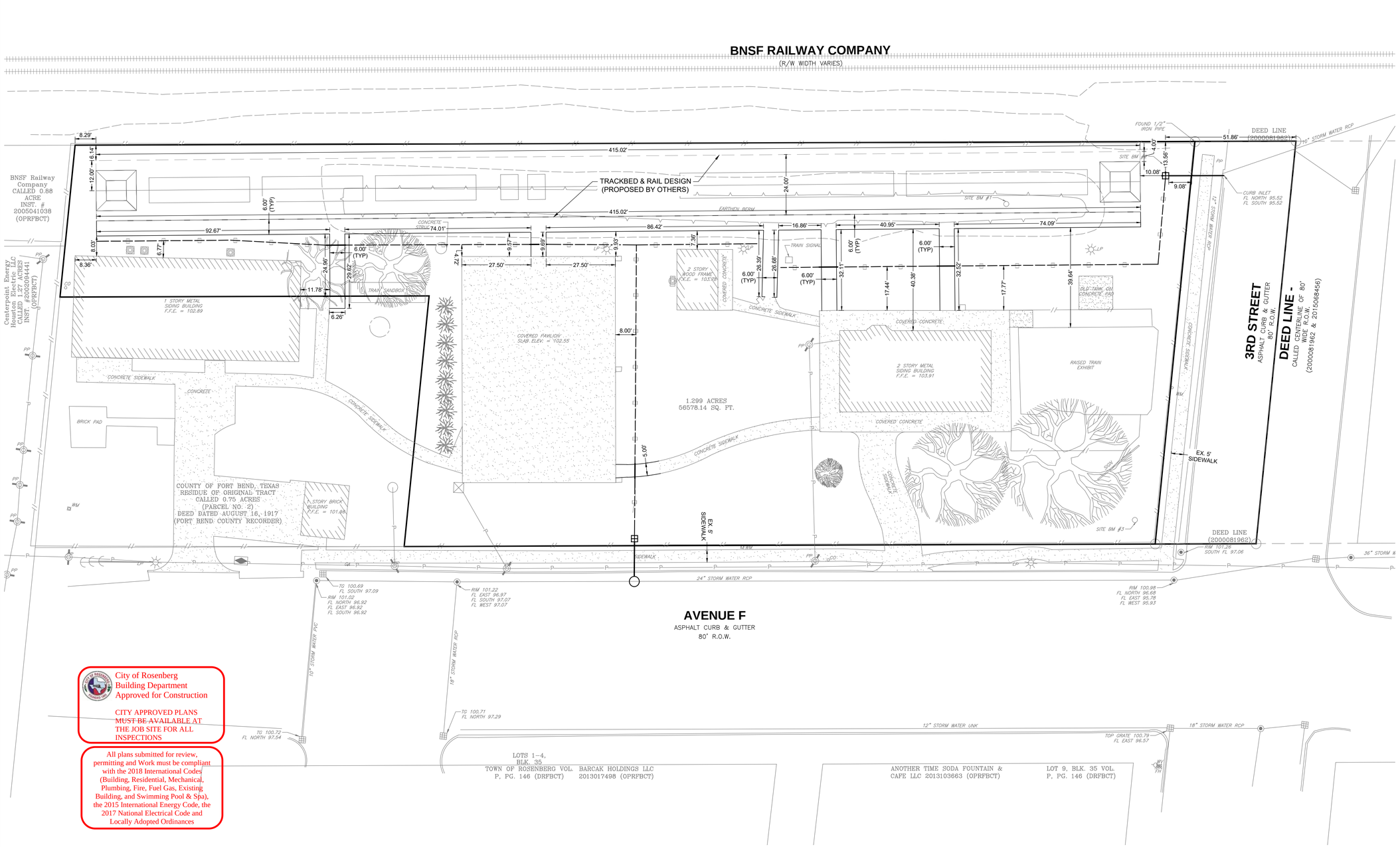

City of Rosenberg
Building Department
Approved for Construction

CITY APPROVED PLANS MUST BE AVAILABLE AT THE JOB SITE FOR ALL INSPECTIONS

All plans submitted for review, permitting and Work must be compliant with the 2018 International Codes (Building, Residential, Mechanical, Plumbing, Fire, Fuel Gas, Existing Building, and Swimming Pool & Spa), the 2015 International Energy Code, the 2017 National Electrical Code and Locally Adopted Ordinances

RITD
RAILROAD INFRASTRUCTURE & TERMINAL DEVELOPMENT, LLC
35505 COOPER RD. · P.O. BOX 1087
BROOKSHIRE, TEXAS 77423
(281) 392-4850 WWW.RITD-LLC.COM FIRM F-16264

REV	DATE	DESCRIPTION

BENCHMARKS:

BENCHMARK #1
ELEVATION - 103.10'
SITE BM #1 - 5/8 IRON ROD YELLOW CAP

BENCHMARK #2
ELEVATION - 101.15'
SITE BM #2 - 5/8 IRON ROD YELLOW CAP

BENCHMARK #3
ELEVATION - 101.49'
SITE BM #3 - 5/8 IRON ROD YELLOW CAP

FLOOD PLAIN NOTE:

THIS SUBJECT TRACT LIES IN UNSHADED ZONE "X" (AREAS DETERMINED TO BE OUTSIDE THE 100-YEAR FLOODPLAIN) AS DELINEATED ON THE FLOOD INSURANCE MAP FOR FORT BEND COUNTY, TEXAS AND INCORPORATED AREAS, MAP NO. 48157C0245L DATED APRIL 2, 2014.
THE NEAREST AND HIGHEST CURRENTLY KNOWN AND RELEVANT 1% ANNUAL CHANCE FLOOD ELEVATION APPEARS TO BE 98.79 FT (NAVD 1988) IN DRY CREEK. THE NEAREST AND HIGHEST CURRENTLY KNOWN AND RELEVANT 0.2% ANNUAL CHANCE FLOOD ELEVATION APPEARS TO BE 99.00 FT (NAVD, 1988) ACCORDING TO CROSS SECTION LINE "AE" ALONG DRY CREEK, REVISED JANUARY 29, 2021 FLOOD INSURANCE STUDY NUMBER 48157CV002C.

RITD Railroad Infrastructure & Terminal Development, LLC

SCALE: 1"=20' DRAWN: MM & CR
CHECK: CC & DR DESIGN: CC

WGA
CONSULTING ENGINEERS
WARD, GETZ & ASSOCIATES, PLLC
TEXAS REGISTERED ENGINEERING FIRM F-9756
2500 Tanglewilde, Suite 120
Houston, Texas 77063
713.789.1900

ROSENBERG RAILROAD MUSEUM

DIMENSION CONTROL PLAN

SHEET
C3.1

STATE OF TEXAS
DEAN W. RASMUSON
117638
LICENSED PROFESSIONAL ENGINEER
4/3/24

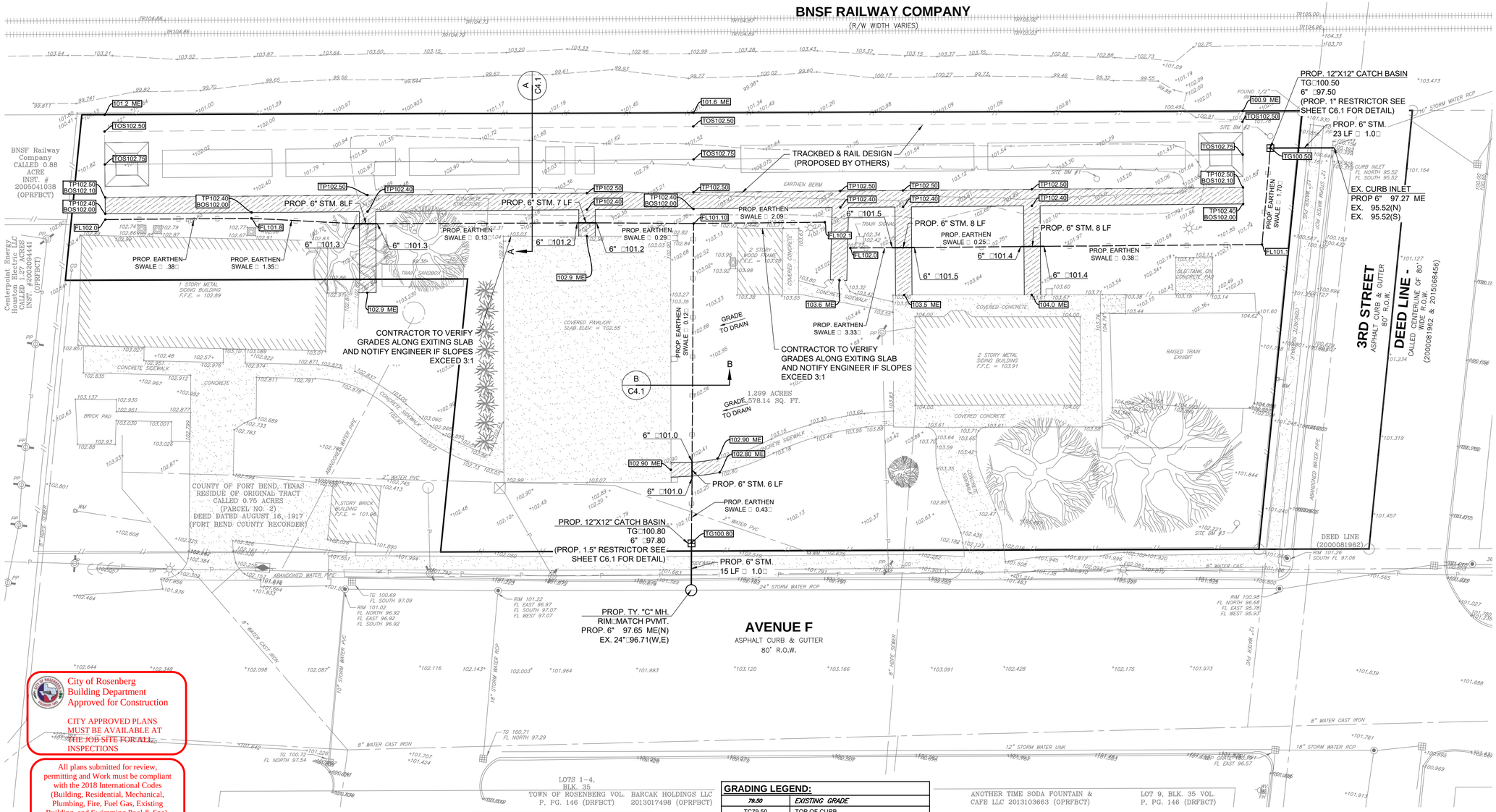

City of Rosenberg
Building Department
Approved for Construction

CITY APPROVED PLANS MUST BE AVAILABLE AT THE JOB SITE FOR ALL INSPECTIONS

All plans submitted for review, permitting and Work must be compliant with the 2018 International Codes (Building, Residential, Mechanical, Plumbing, Fire, Fuel Gas, Existing Building, and Swimming Pool & Spa), the 2015 International Energy Code, the 2017 National Electrical Code and EX.Local Amendments/Ordinances

UTILITY NOTES:

1. PRIVATE STORM SEWER TO BE HDPE UNLESS OTHERWISE NOTED. FOR PUBLIC STORM SEWER REFERENCE GENERAL NOTES.
2. UTILITIES SHOWN ARE APPROXIMATE. CONTRACTOR TO FIELD VERIFY EXISTING UTILITY LOCATIONS PRIOR TO CONSTRUCTION AND IMMEDIATELY NOTIFY ENGINEER OF ANY CONFLICT OR DISCREPANCIES.
3. CONTRACTOR TO COORDINATE WITH UTILITY COMPANIES FOR SERVICE ORIGINATION AND CONNECTION.
4. CONTRACTOR SHALL TAKE CARE NOT TO DAMAGE ANY EXISTING ITEMS ONSITE.
5. CONTRACTOR SHALL KEEP THE SITE CLEAN OF DEBRIS AND ANY EROSION CONTROL MEASURES ARE ADE UATELY PLACED.
6. CONTRACTOR TO COORDINATE LOCATIONS OF UNDERGROUND IRRIGATION SLEEVING PRIOR TO PAVING. SEE LANDSCAPE PLANS.
7. CONTRACTOR TO COORDINATE LOCATIONS OF UNDERGROUND CONDUIT FOR SITE LIGHTING PRIOR TO PAVING.
8. ALL CONSTRUCTION OPERATIONS SHALL BE ACCOMPLISHED IN ACCORDANCE WITH APPLICABLE REGULATIONS OF THE U.S. OCCUPATIONAL HEALTH AND SAFETY ADMINISTRATION. COPIES OF OSHA STANDARDS MAY BE PURCHASED FROM THE U.S. GOVERNMENT PRINTING OFFICE. INFORMATION AND RELATED REFERENCE MATERIALS MAY BE PURCHASED FROM OSHA, 903 SAN ACINTO, RM 319, AUSTIN, TX. 78701. TEL: (512) 916-5783.
9. REFERENCE MEP PLANS FOR UTILITY CONDUIT LOCATIONS.
10. CONTRACTOR TO AD UST ALL EXISTING APPURTENANCES ON SITE TO PROPOSED GRADE, AS APPLICABLE.

GRADING NOTES:

1. ALL SPOT ELEVATIONS ARE TO TOP OF PAVEMENT UNLESS OTHERWISE NOTED.
2. ALL SIDEWALKS AND ACCESSIBLE ROUTES, INCLUDING DRIVEWAY CROSSWALKS, SHALL CONFORM TO ALL APPLICABLE AMERICANS WITH DISABILITIES ACT STANDARDS AND THE TEXAS ACCESSIBILITY STANDARDS. IF ANY DISCREPANCY IS DISCOVERED, THE CONTRACTOR SHALL NOTIFY THE ENGINEER PRIOR TO POURING ANY PAVEMENT.
3. ALL SIDEWALKS AND ACCESSIBLE ROUTES, INCLUDING DRIVEWAY CROSSWALKS, SHALL NOT EXCEED A RUNNING SLOPE OF 5 (1:20) WITHOUT A RAMP, AND SHALL NOT EXCEED A 2 CROSS SLOPE (1:50).
4. THE ACCESSIBLE PARKING AND PASSENGER LOADING AREAS SHALL NOT EXCEED A SLOPE OF 2 (1:50) IN ANY DIRECTION.
5. CONTRACTOR TO AD UST ALL EXISTING APPURTENANCES ON SITE TO PROPOSED GRADE, AS APPLICABLE.
6. CONTRACTOR SHALL REFERENCE GEOTECHNICAL REPORT AND ALL ADDENDA FOR BUILDING PAD LIMITS AND PREPARATION RE UIREMENTS.
7. CONTRACTOR SHALL ENSURE THERE IS POSITIVE DRAINAGE FROM THE PROPOSED BUILDINGS AND NO PONDING IN PAVED AREAS, AND SHALL NOTIFY ENGINEER IF ANY GRADING DISCREPANCIES ARE FOUND IN THE EXISTING AND PROPOSED GRADES PRIOR TO PLACEMENT OF PAVEMENT OR UTILITIES.

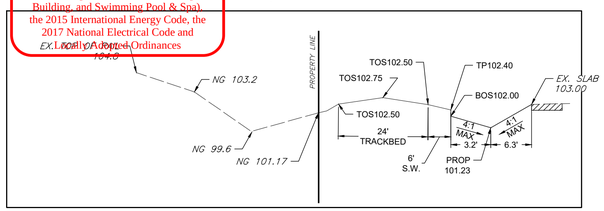

CROSS SECTION - A-A
N.T.S.

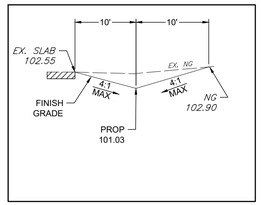

CROSS SECTION - B-B
N.T.S.

GRADING LEGEND:

79.50	*EXISTING GRADE*
TC79.50	TOP OF CURB
G79.50	GUTTER
TP79.50	TOP OF PAVEMENT
TR79.50	TOP OF RAIL
TG79.50	TOP OF GRATE
79.5	PROPOSED NATURAL GROUND
79.50 ME	MATCH EXISTING
HP79.50	HIGH POINT
TW79.50	TOP OF WALL
BW79.50	BASE OF WALL
TOS79.50	TOP OF SUBBALLAST
BOS79.50	BOTTOM OF SIDEWALK
1	TRANSITION CURB 0" - 6" WITHIN 5 FEET
	SWALE
	HIGH POINT
130	EXISTING CONTOUR
130	PROPOSED CONTOUR

PIPING MATERIAL SCHEDULE

STORM SEWER - SMALLER THAN 12"	SDR-35 PVC PER ASTM D3034
STORM SEWER - 12" OR LARGER (PRIVATE)	DUAL-WALLED HDPE, AASHTO M252 & M294
STORM SEWER - WITHIN PUBLIC EASEMENT OR RIGHT-OF-WAY	RCP, C-76, CLASS III
STORM SEWER - UNDERNEATH BUILDING	SCHEDULE 40 PVC

LEGEND:

	EXISTING PAVEMENT (CONCRETE/ASPHALT AS NOTED)
	PROPOSED 4 ½" CONCRETE PAVEMENT (SIDEWALK)

0 20 40
SCALE: 1" = 20'

RITD
RAILROAD INFRASTRUCTURE & TERMINAL DEVELOPMENT, LLC
35505 COOPER RD. · P.O. BOX 1087
BROOKSHIRE, TEXAS 77423
(281) 392-4850 WWW.RITD-LLC.COM FIRM F-16264

REV	DATE	DESCRIPTION

BENCHMARKS:

BENCHMARK #1
ELEVATION - 103.10'
SITE BM #1 - 5/8 IRON ROD YELLOW CAP

BENCHMARK #2
ELEVATION - 101.15'
SITE BM #2 - 5/8 IRON ROD YELLOW CAP

BENCHMARK #3
ELEVATION - 101.49'
SITE BM #3 - 5/8 IRON ROD YELLOW CAP

FLOOD PLAIN NOTE:

THIS SUBJECT TRACT LIES IN UNSHADED ZONE "X" (AREAS DETERMINED TO BE OUTSIDE THE 100-YEAR FLOODPLAIN) AS DELINEATED ON THE FLOOD INSURANCE MAP FOR FORT BEND COUNTY, TEXAS AND INCORPORATED AREAS, MAP NO. 48157C0245L DATED APRIL 2, 2014.
THE NEAREST AND HIGHEST CURRENTLY KNOWN AND RELEVANT 1% ANNUAL CHANCE FLOOD ELEVATION APPEARS TO BE 98.79 FT (NAVD 1988) IN DRY CREEK. THE NEAREST AND HIGHEST CURRENTLY KNOWN AND RELEVANT 0.2% ANNUAL CHANCE FLOOD ELEVATION APPEARS TO BE 99.00 FT (NAVD, 1988) ACCORDING TO CROSS SECTION LINE "AE" ALONG DRY CREEK, REVISED JANUARY 29, 2021 FLOOD INSURANCE STUDY NUMBER 48157CV002C.

RITD Railroad Infrastructure & Terminal Development, LLC

SCALE: 1"=20' DRAWN: MM & CR
CHECK: CC & DR DESIGN: CC

WGA
CONSULTING ENGINEERS
WARD, GETZ & ASSOCIATES, PLLC
TEXAS REGISTERED ENGINEERING FIRM F-9756
2500 Tanglewilde, Suite 120
Houston, Texas 77063
713.789.1900

ROSENBERG RAILROAD MUSEUM

STORM SEWER & GRADING PLAN

SHEET
C4.1

STATE OF TEXAS
DEAN W. RASMUSON
117638
LICENSED PROFESSIONAL ENGINEER
4/3/24

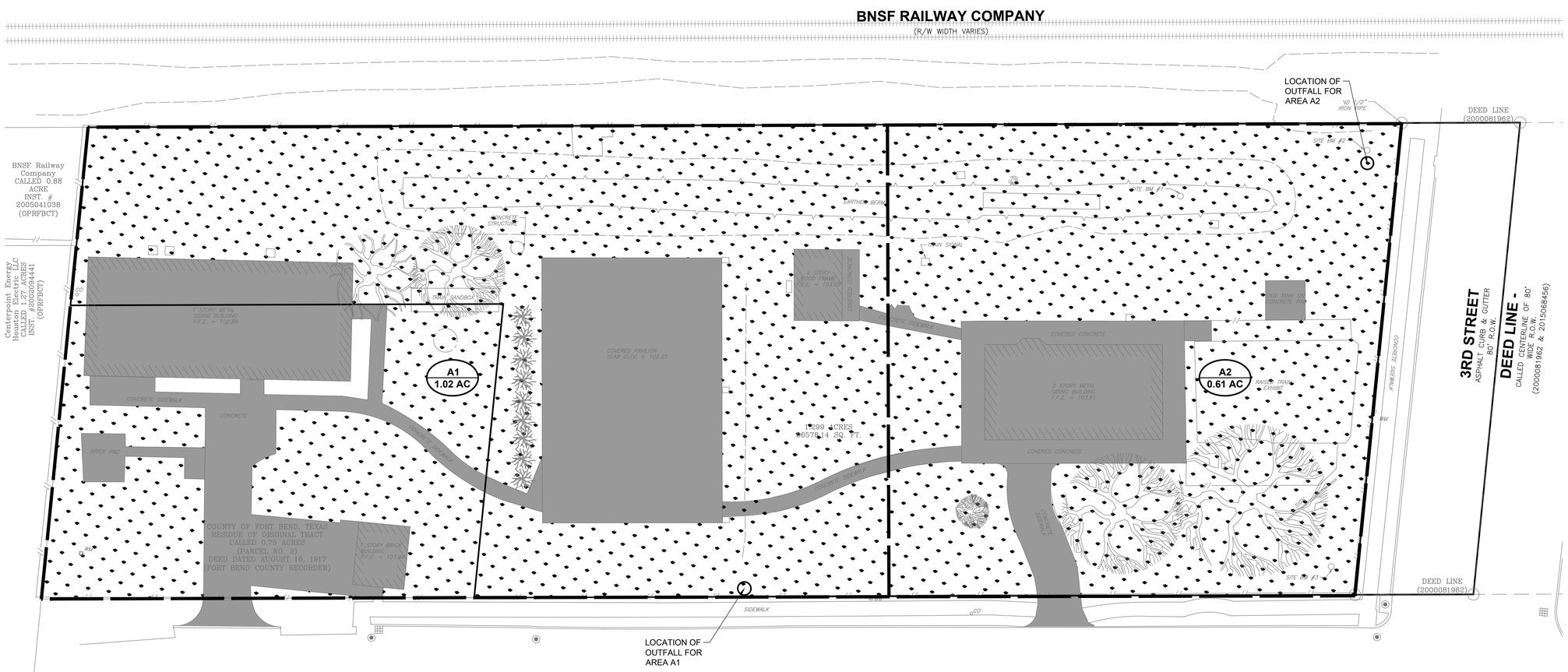

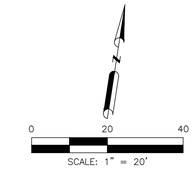

DRAINAGE AREA MAP LEGEND:	
A / 1.52 AC	DRAINAGE AREA AREA IN ACRES
	DRAINAGE BOUNDARY

LEGEND:		
	TOTAL EXISTING IMPERVIOUS COVER	0.50 AC
	TOTAL EXISTING GRASS COVER	1.21 AC
	TOTAL EXISTING GRAVEL COVER	0 AC

WGA

$$i = \frac{b}{(d + TC)^e}$$

C Coefficient				
C(Gravel)	0.3			
C(Grass)	0.18			
C(Concrete)	0.85			
*NOTE These values were obtained from Fort Bend County Drainage Criteria				
A1 (Gravel)	0		A2 (Gravel)	0
A1 (Grass)	0.69		A2 (Grass)	0.5
A1 (Concrete)	0.33		A2 (Concrete)	0.12
C=((C1A1)+(C2A2)+(C3A3))/(A1+A2+A3)				
Final C1	0.40		Final C2	0.31

City of Rosenberg
Building Department
Approved for Construction

CITY APPROVED PLANS MUST BE AVAILABLE AT THE JOB SITE FOR ALL INSPECTIONS

All plans submitted for review, permitting and Work must be compliant with the 2018 International Codes (Building, Residential, Mechanical, Plumbing, Fire, Fuel Gas, Existing Building, and Swimming Pool & Spa), the 2015 International Energy Code, the 2017 National Electrical Code and Locally Adopted Ordinances

5-YR DISCHARGE - EXISTING

ID	AREA ac.	C	C*Cf	TC min.	I in/hr	Q cfs		
							C_f =	1.00
							b =	53.74
							d =	8.30
A1 - Existing	1.02	0.40	0.40	25.03	4.56	1.85	e =	0.7033
A2 - Existing	0.68	0.31	0.31	24.34	4.63	0.97		

100-YR DISCHARGE - EXISTING

ID	AREA ac.	C	C*Cf	TC min.	I in/hr	Q cfs		
							C_f =	1.00
							b =	42.99
							d =	1.08
A1 - Existing	1.02	0.4	0.4	25.03	7.69	3.14	e =	0.5274
A2 - Existing	0.68	0.31	0.31	24.34	7.8	1.64		

RITD
RAILROAD INFRASTRUCTURE & TERMINAL DEVELOPMENT, LLC
35505 COOPER RD. · P.O. BOX 1087
BROOKSHIRE, TEXAS 77423
(281) 392-4850 WWW.RITD-LLC.COM FIRM F-16264

REV	DATE	DESCRIPTION

BENCHMARKS:

BENCHMARK #1
ELEVATION - 103.10'
SITE BM #1 - 5/8 IRON ROD YELLOW CAP

BENCHMARK #2
ELEVATION - 101.15'
SITE BM #2 - 5/8 IRON ROD YELLOW CAP

BENCHMARK #3
ELEVATION - 101.49'
SITE BM #3 - 5/8 IRON ROD YELLOW CAP

FLOOD PLAIN NOTE:

THIS SUBJECT TRACT LIES IN UNSHADED ZONE "X" (AREAS DETERMINED TO BE OUTSIDE THE 100-YEAR FLOODPLAIN) AS DELINEATED ON THE FLOOD INSURANCE MAP FOR FORT BEND COUNTY, TEXAS AND INCORPORATED AREAS, MAP NO. 48157C0245L DATED APRIL 2, 2014.
THE NEAREST AND HIGHEST CURRENTLY KNOWN AND RELEVANT 1% ANNUAL CHANCE FLOOD ELEVATION APPEARS TO BE 98.79 FT (NAVD 1988) IN DRY CREEK. THE NEAREST AND HIGHEST CURRENTLY KNOWN AND RELEVANT 0.2% ANNUAL CHANCE FLOOD ELEVATION APPEARS TO BE 99.00 FT (NAVD, 1988) ACCORDING TO CROSS SECTION LINE "AE" ALONG DRY CREEK, REVISED JANUARY 29, 2021 FLOOD INSURANCE STUDY NUMBER 48157CV002C.

RITD RAILROAD INFRASTRUCTURE & TERMINAL DEVELOPMENT, LLC

SCALE: 1"=20' DRAWN: MM & CR
CHECK: CC & DR DESIGN: CC

WGA
CONSULTING ENGINEERS
WARD, GETZ & ASSOCIATES, PLLC
TEXAS REGISTERED ENGINEERING FIRM F-9756
2500 Tanglewilde, Suite 120
Houston, Texas 77063
713.789.1900

ROSENBERG RAILROAD MUSEUM

EXISTING DRAINAGE AREA MAP & CALCULATIONS

SHEET
C5.1

STATE OF TEXAS
DEAN W. RASMUSON
117638
LICENSED PROFESSIONAL ENGINEER
4/3/24

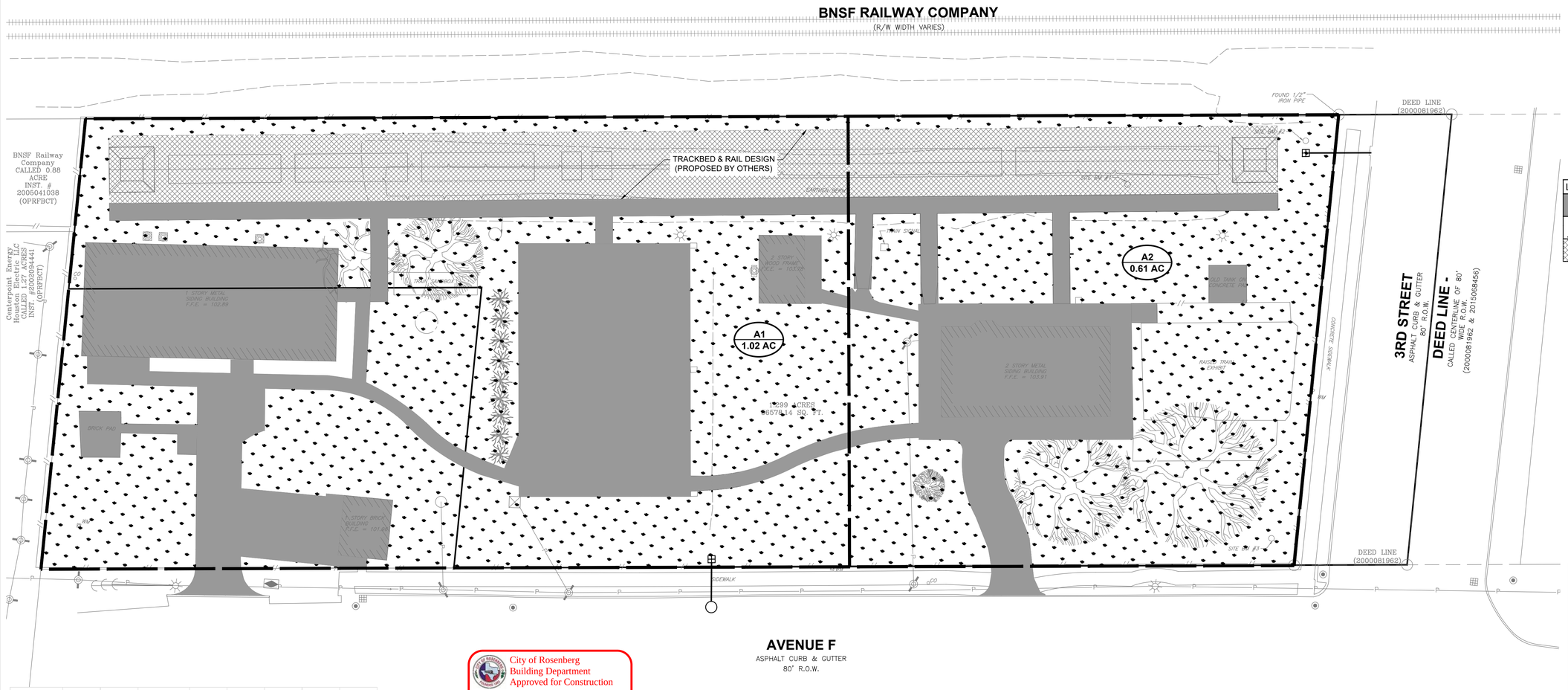

0 20 40
SCALE: 1" = 20'

LEGEND:		
	TOTAL PROPOSED IMPERVIOUS COVER	0.58 AC
	TOTAL PROPOSED GRASS COVER	0.90 AC
	TOTAL PROPOSED GRAVEL COVER	.23 AC

DRAINAGE AREA MAP LEGEND:	
A 1.52 AC	DRAINAGE AREA AREA IN ACRES
	DRAINAGE BOUNDARY

City of Rosenberg
Building Department
Approved for Construction

CITY APPROVED PLANS MUST BE AVAILABLE AT THE JOB SITE FOR ALL INSPECTIONS

All plans submitted for review, permitting and Work must be compliant with the 2018 International Codes (Building, Residential, Mechanical, Plumbing, Fire, Fuel Gas, Existing Building, and Swimming Pool & Spa), the 2015 International Energy Code, the 2017 National Electrical Code and Locally Adopted Ordinances

WGA

$$i = \frac{b}{(d + TC)^e}$$

C Coefficient				
C(Gravel)	0.3			
C(Grass)	0.18			
C(Concrete)	0.85			
*NOTE These values were obtained from Fort Bend County Drainage Criteria				
A1 (Gravel)	0.15		A2 (Gravel)	0.08
A1 (Grass)	0.5		A2 (Grass)	0.38
A1 (Concrete)	0.36		A2 (Concrete)	0.15
C=((C1A1)+(C2A2)+(C3A3))/(A1+A2+A3)				
Final C1	0.44		Final C2	0.36

5-YR DISCHARGE - PROPOSED

ID	AREA ac.	C	C*Cf	TC min.	I in/hr	Q cfs		
							C_f =	1.00
							b =	53.74
							d =	8.30
A1 - Proposed	1.02	0.44	0.44	25.03	4.56	2.03	e =	0.7033
A2 - Proposed	0.68	0.36	0.36	24.34	4.63	1.13		

100-YR DISCHARGE - PROPOSED

ID	AREA ac.	C	C*Cf	TC min.	I in/hr	Q cfs		
							C_f =	1.00
							b =	42.99
							d =	1.08
A1 - Proposed	1.02	0.44	0.44	25.03	7.69	3.45	e =	0.5274
A2 - Proposed	0.68	0.36	0.36	24.34	7.8	1.91		

AREA 1 Orifice Calculations					
Existing TC	101.4		h = TC - (FL+(3/12))		
Proposed TG	100.8			h	3.35
Proposed 6" FL	97.8				
Area 1 ac.	1.02				
Allowable Discharge					
Q1=A1(0.165)					
Q1	0.168				
Q=CA(2gh)^0.5		C	0.8		
A=(3.14/4)d^2					
For 1.5" Orifice					
A	0.012				
Q	0.144	<Q1			

AREA 2 Orifice Calculations					
Existing TC	100.4		h = TC - (FL+(3/12))		
Proposed TG	100.5			h	2.65
Proposed 6" FL	97.5				
Area 2 ac.	0.61				
Allowable Discharge					
Q2=A2(0.165)					
Q2=A1(0.165)	0.101				
Q=CA(2gh)^0.5		C	0.8		
A=(3.14/4)d^2					
For 1" Orifice					
A	0.005				
Q	0.057	<Q2			

RITD
RAILROAD INFRASTRUCTURE & TERMINAL DEVELOPMENT, LLC
35505 COOPER RD. · P.O. BOX 1087
BROOKSHIRE, TEXAS 77423
(281) 392-4850 WWW.RITD-LLC.COM FIRM F-16264

REV	DATE	DESCRIPTION

BENCHMARKS:

BENCHMARK #1
ELEVATION - 103.10'
SITE BM #1 - 5/8 IRON ROD YELLOW CAP

BENCHMARK #2
ELEVATION - 101.15'
SITE BM #2 - 5/8 IRON ROD YELLOW CAP

BENCHMARK #3
ELEVATION - 101.49'
SITE BM #3 - 5/8 IRON ROD YELLOW CAP

FLOOD PLAIN NOTE:

THIS SUBJECT TRACT LIES IN UNSHADED ZONE "X" (AREAS DETERMINED TO BE OUTSIDE THE 100-YEAR FLOODPLAIN) AS DELINEATED ON THE FLOOD INSURANCE MAP FOR FORT BEND COUNTY, TEXAS AND INCORPORATED AREAS, MAP NO. 48157C0245L DATED APRIL 2, 2014.
THE NEAREST AND HIGHEST CURRENTLY KNOWN AND RELEVANT 1% ANNUAL CHANCE FLOOD ELEVATION APPEARS TO BE 98.79 FT (NAVD 1988) IN DRY CREEK. THE NEAREST AND HIGHEST CURRENTLY KNOWN AND RELEVANT 0.2% ANNUAL CHANCE FLOOD ELEVATION APPEARS TO BE 99.00 FT (NAVD, 1988) ACCORDING TO CROSS SECTION LINE "AE" ALONG DRY CREEK, REVISED JANUARY 29, 2021 FLOOD INSURANCE STUDY NUMBER 48157CV002C.

RITD RAILROAD INFRASTRUCTURE & TERMINAL DEVELOPMENT, LLC

SCALE: 1"=20' DRAWN: MM & CR
CHECK: CC & DR DESIGN: CC

WGA
CONSULTING ENGINEERS
WARD, GETZ & ASSOCIATES, PLLC
TEXAS REGISTERED ENGINEERING FIRM F-9756
2500 Tanglewilde, Suite 120
Houston, Texas 77063
713.789.1900

ROSENBERG RAILROAD MUSEUM

PROPOSED DRAINAGE AREA MAP & CALCULATIONS

SHEET
C5.2

STATE OF TEXAS
DEAN W. RASMUSON
117638
LICENSED PROFESSIONAL ENGINEER
4/3/24

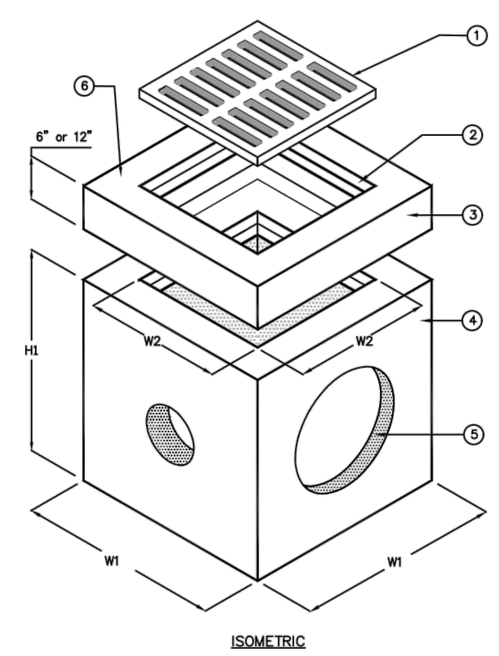

NOTE: KNOCKOUTS–STD, PENETRATIONS–OPTIONAL

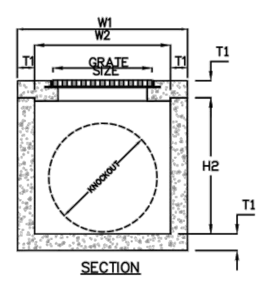

KEYED NOTES		
MARK	QTY	DESCRIPTION
1	1	GRATE OR COVER AS REQUESTED, SEE OPTIONS
2	1	CAST–IN STEEL FRAME
3	1	OPTIONAL TOP/EXTENSION 6" TO 18"
4	1	PRECAST CONCRETE BASIN SECTION
5	4	KNOCKOUTS (STD) AND PENETRATIONS (OPT) AS REQUIRED, SEE KO DIMENSION FOR MAXIMUM PIPE O.D.*
6	1	NAMEPLATE INDICATING: MFG: PARKUSA 888–611–PARK WWW.PARKUSA.COM MODEL: CB–01 DATE MANUFACTURED

ADDITIONAL OPTIONS

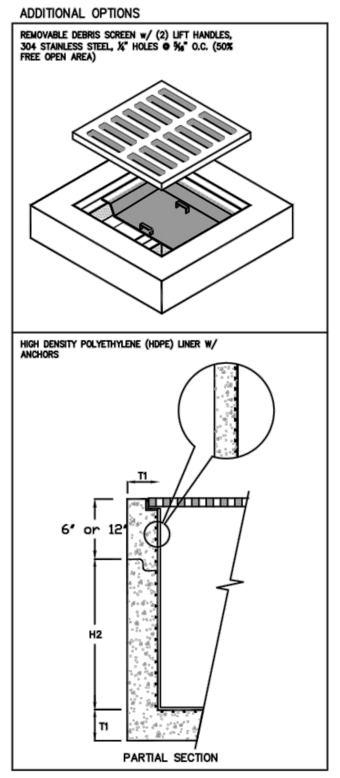

COVER OPTIONS

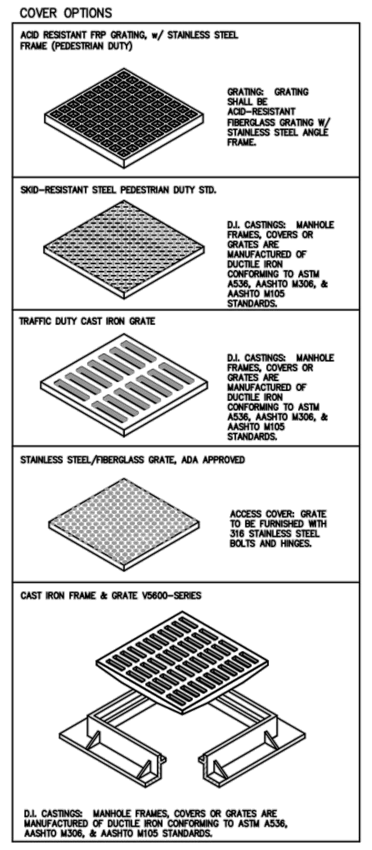

MODEL	W1	W2	H1	H2	T1	T2	KO	GRATE SIZE	OPEN AREA	WEIGHT LBS
CB–12	15"	10"	21"	18"	3"	2"	10"	12"x12"x1"	90	180
CB–14	20"	12"	28"	24"	4"	4"	12"	14"x14"x1½"	120	600
CB–18	24"	16"	34"	30"	4"	4"	15"	18"x18"x1½"	168	1,000
CB–20	26"	18"	34"	30"	4"	4"	17"	20"x20"x1½"	170	1,335
CB–24	32"	22"	41"	36"	5"	5"	22"	24"x24"x2"	268	2,245
CB–27	37"	25"	42"	36"	6"	6"	24"	27"x27"x2"	350	2,875
CB–30	42"	30"	42"	36"	6"	6"	30"	32"x32"x2"	490	3,675
CB–36	48"	36"	42"	36"	6"	6"	32"	38"x38"x2"	693	4,585
CB–48	60"	48"	54"	48"	6"	6"	48"	38"x38"x2"	693	7,250
*CB–60	72"	60"	66"	60"	6"	6"	60"	38"x38"x2"	693	10,500
*CB–72	84"	72"	78"	72"	6"	6"	72"	38"x38"x2"	693	15,350
*CB–84	96"	84"	78"	72"	6"	6"	72"	38"x38"x2"	693	19,500

*KNOCKOUTS NOT AVAILABLE

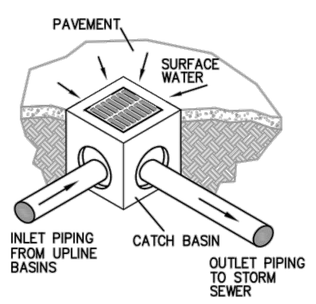

SPECIFICATIONS

CONCRETE : CLASS I/II CONCRETE WITH OF DESIGN STRENGTH OF 4500 PSI AT 28 DAYS. UNIT IS OF MONOLITHIC CONSTRUCTION AT FLOOR AND FIRST STAGE OF WALL WITH SECTIONAL RISER TO REQUIRED DEPTH.

REINFORCEMENT: GRADE 60 REINFORCED. STEEL REBAR CONFORMING TO ASTM A615 ON REQUIRED CENTERS OR EQUAL.

C.I. CASTINGS: CAST IRON FRAMES AND GRATES ARE MANUFACTURED OF GREY CAST IRON CONFORMING TO ASTM A48–76 CLASS 30.

© ParkUSA. ALL RIGHTS RESERVED.

PROJECT: .
CUSTOMER: .
ENGINEER: .
ORDER #: . PROJ #: .
DATE: . LOCATION: .

PARK USA
www.parkusa.com 888–611–PARK

CATCH BASIN
MODEL CB – 12" THRU 84"

PM . PC . DRN . ENG . DWG. NO. CB–1 REV. .
DATE 01/2019

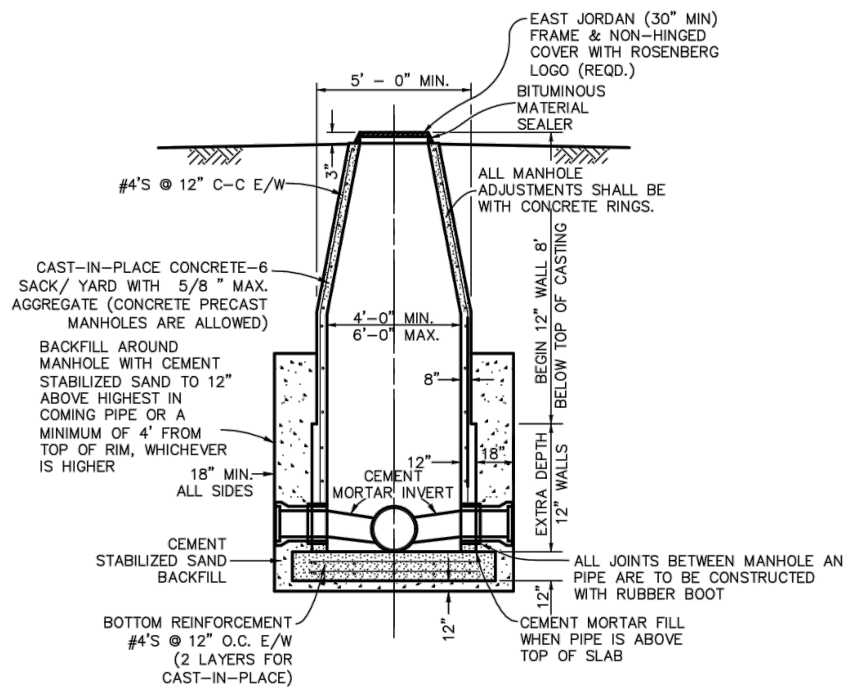

ELEVATION VIEW

NOTES:
1. ALL STORM SEWER MANHOLE COVERS SHALL BE CITY OF ROSENBERG LABELED AS "STORM".
2. MANHOLE MAY BE CONSTRUCTED USING PRECAST CONE AND BOTTOM. BRICK WILL NOT BE ALLOWED.
3. PRECAST CONCRETE MANHOLE CONFORMING TO ASTM C478. STRUCTURAL REINFORCEMENT CONFORMING TO ASTM 615A.
4. RUBBER GASKET JOINTS ARE TO BE USED ON ALL PRECAST MANHOLE APPLICATIONS.
5. FOR CAST–IN–PLACE MANHOLES, CONCRETE SHALL BE A MONOLITHIC POUR.

THE CITY OF ROSENBERG, FORT BEND COUNTY, TEXAS DEPARTMENT OF PUBLIC WORKS

TYPE "C" MANHOLE 18"–42"

DESIGN:	CAD:	SCALE:	DATE:	DRAWING:
CFA	STAFF	NTS	3/18	D–101

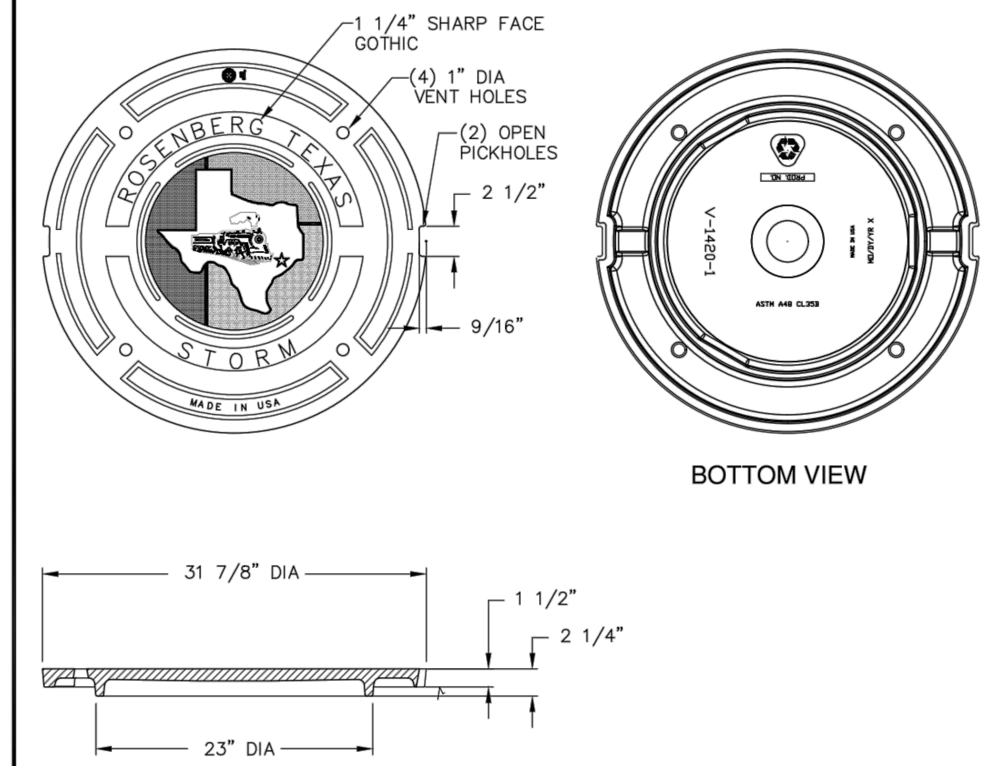

NOTES:
1. ALL STORM SEWER MANHOLE COVERS SHALL BE LABELED "ROSENBERG TEXAS" AND "STORM" AND INCLUDE THE SPECIFIED LOGO.
2. 32" MANHOLE COVERS SHALL BE USED ON ALL STORM SEWER MANHOLES.
3. COVER AND 32" FRAME MANUFACTURED BY EAST JORDAN IRON WORKS OR APPROVED EQUAL.

THE CITY OF ROSENBERG, FORT BEND COUNTY, TEXAS DEPARTMENT OF PUBLIC WORKS

STORM SEWER 32" MANHOLE COVER

DESIGN:	CAD:	SCALE:	DATE:	DRAWING:
CFA	STAFF	NTS	2/18	D–111

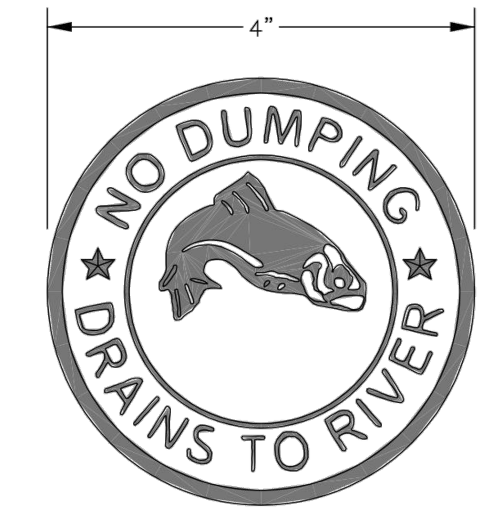

STORM DRAIN MARKER

ITEM NO. SD–4
1 COLOR: BLUE, 4" DISC
MATERIAL: STAINLESS STEEL
SYMBOL: FISH
MANUFACTURED BY:
ALMETEK INDUSTRIES, INC.
2 JOY DRIVE
HACKETTSTOWN, NJ 07840
1 (800) 248–2080
www.almetek.com

NOTES:
1. Surface installation requires the surface be brushed with a wire brush and all dust blown off that surface.
2. Install marker with [SIKS–ADH] Sikabound Adhesive using a dripless caulking tube gun. Place the adhesive on the back side of the marker in a circular motion from the outside of the marker into the middle of the marker. Place marker in place and apply pressure to the face of the marker.
3. Markers may be applied to concrete, asphalt or steel. The City of Rosenberg requires the marker to be placed on the middle of every catch basin on all storm drains.

THE CITY OF ROSENBERG, FORT BEND COUNTY, TEXAS DEPARTMENT OF PUBLIC WORKS

NO DUMPING METAL STORM DRAIN MARKER

DESIGN:	CAD:	SCALE:	DATE:	DRAWING:
CAK	STAFF	NTS	11/10	D–109

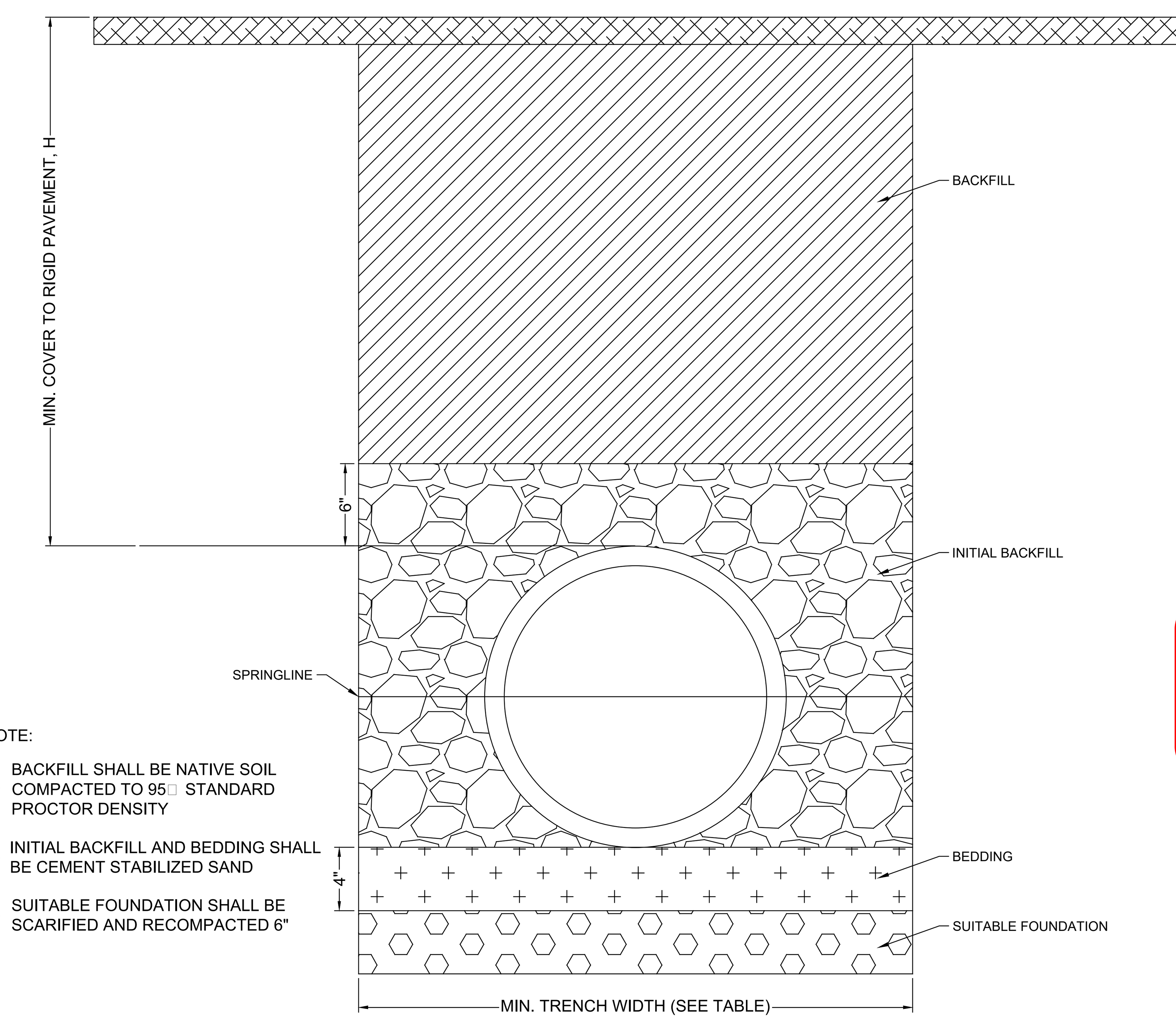

NOTE:
① BACKFILL SHALL BE NATIVE SOIL COMPACTED TO 95□ STANDARD PROCTOR DENSITY
② INITIAL BACKFILL AND BEDDING SHALL BE CEMENT STABILIZED SAND
③ SUITABLE FOUNDATION SHALL BE SCARIFIED AND RECOMPACTED 6"

STORM SEWER BEDDING & BACKFILL DETAIL
N.T.S.

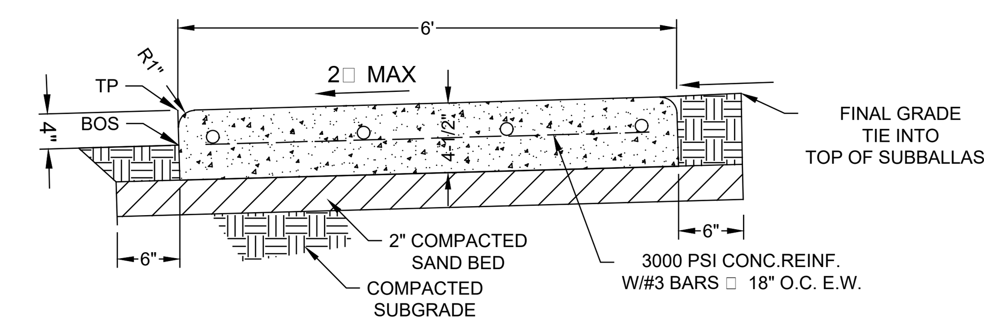

① CONTRACTOR SHALL PROVIDE A SAWED □OINT SPACED E□UAL TO WIDTH (W) AND EXPANSION □OINTS TO BE PLACED □ 4 X W

② SIDEWALK 4.5" THICKNESS CONCRETE PAVEMENT

③ TP□TOP OF PAVEMENT
BOS□BOTTOM OF SIDEWALK

CONCRETE SIDEWALK DETAIL
N.T.S.

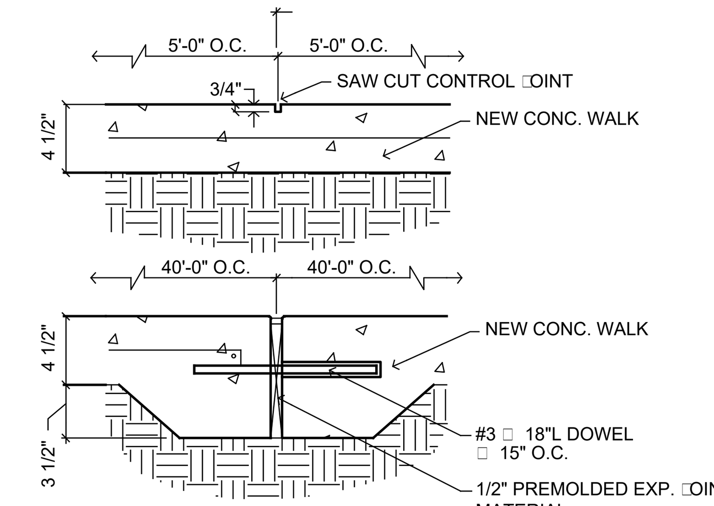

NOTE: ALIGN WALK EXP. □OINTS WITH PAVING EXP. □OINTS

SIDEWALK CONTROL & EXP. □OINT
N.T.S.

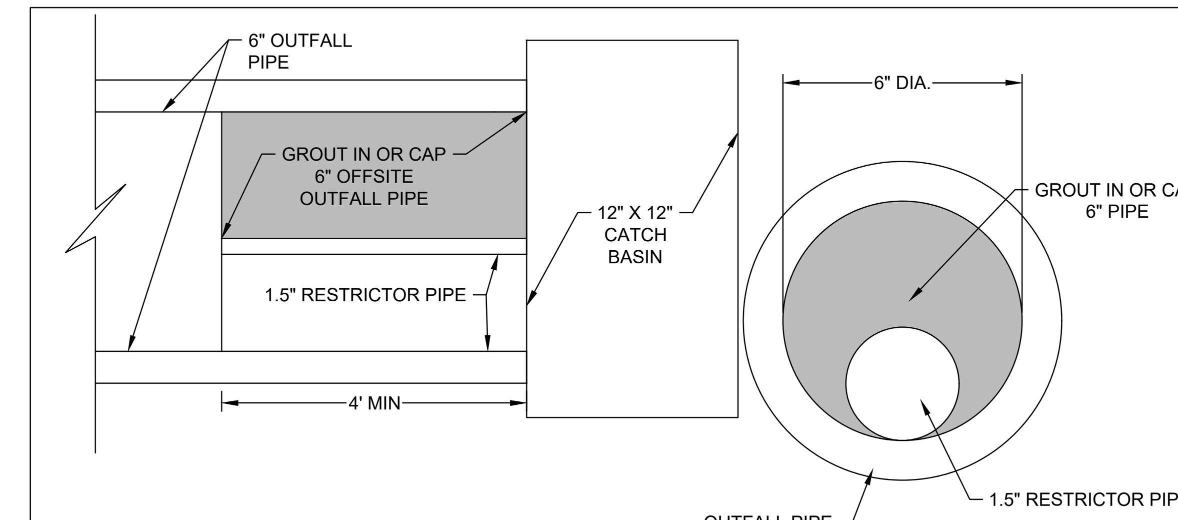

AREA 1 RESTRICTOR DETAIL
N.T.S.

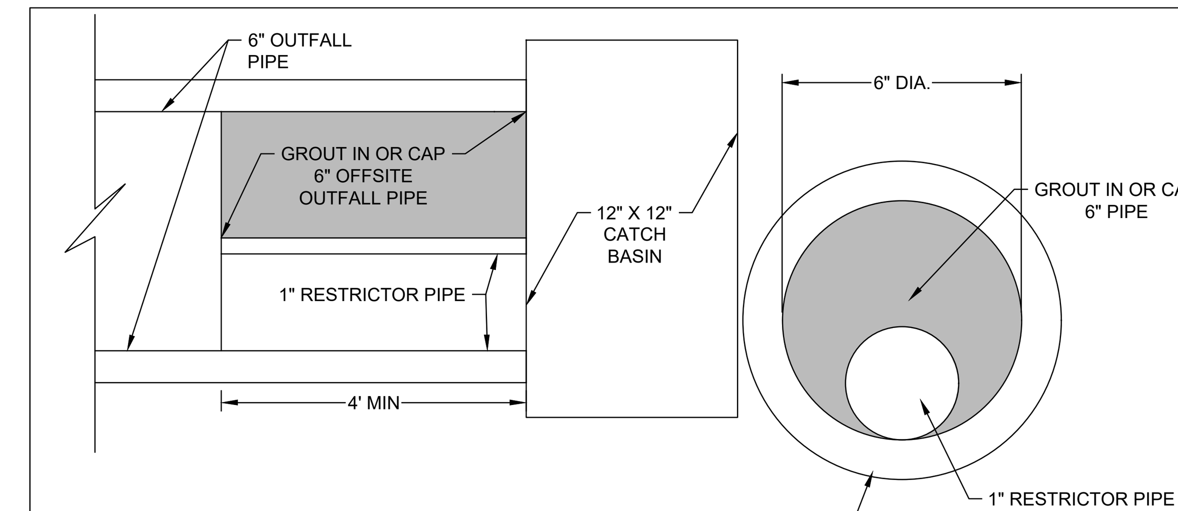

AREA 2 RESTRICTOR DETAIL
N.T.S.

City of Rosenberg
Building Department
Approved for Construction

CITY APPROVED PLANS MUST BE AVAILABLE AT THE JOB SITE FOR ALL INSPECTIONS

All plans submitted for review, permitting and Work must be compliant with the 2018 International Codes (Building, Residential, Mechanical, Plumbing, Fire, Fuel Gas, Existing Building, and Swimming Pool & Spa), the 2015 International Energy Code, the 2017 National Electrical Code and Locally Adopted Ordinances

RITD
RAILROAD INFRASTRUCTURE & TERMINAL DEVELOPMENT, LLC
35505 COOPER RD. · P.O. BOX 1087
BROOKSHIRE, TEXAS 77423
(281) 392-4850 WWW.RITD-LLC.COM FIRM F-16264

REV	DATE	DESCRIPTION

BENCHMARKS:

BENCHMARK #1
ELEVATION - 103.10'
SITE BM #1 - 5/8 IRON ROD YELLOW CAP

BENCHMARK #2
ELEVATION - 101.15'
SITE BM #2 - 5/8 IRON ROD YELLOW CAP

BENCHMARK #3
ELEVATION - 101.49'
SITE BM #3 - 5/8 IRON ROD YELLOW CAP

FLOOD PLAIN NOTE:

THIS SUBJECT TRACT LIES IN UNSHADED ZONE "X" (AREAS DETERMINED TO BE OUTSIDE THE 100-YEAR FLOODPLAIN) AS DELINEATED ON THE FLOOD INSURANCE MAP FOR FORT BEND COUNTY, TEXAS AND INCORPORATED AREAS, MAP NO. 48157C0245L DATED APRIL 2, 2014.
THE NEAREST AND HIGHEST CURRENTLY KNOWN AND RELEVANT 1% ANNUAL CHANCE FLOOD ELEVATION APPEARS TO BE 98.79 FT (NAVD 1988) IN DRY CREEK. THE NEAREST AND HIGHEST CURRENTLY KNOWN AND RELEVANT 0.2% ANNUAL CHANCE FLOOD ELEVATION APPEARS TO BE 99.00 FT (NAVD, 1988) ACCORDING TO CROSS SECTION LINE "AE" ALONG DRY CREEK, REVISED JANUARY 29, 2021 FLOOD INSURANCE STUDY NUMBER 48157CV002C.

RITD Railroad Infrastructure & Terminal Development, LLC

SCALE: N/A DRAWN: MM & CR
CHECK: CC & DR DESIGN: CC

WGA
CONSULTING ENGINEERS
WARD, GETZ & ASSOCIATES, PLLC
TEXAS REGISTERED ENGINEERING FIRM F-9756
2500 Tanglewilde, Suite 120
Houston, Texas 77063
713.789.1900

ROSENBERG RAILROAD MUSEUM

PA□ING & STORM SEWER DETAILS

SHEET
C6.1

STATE OF TEXAS
DEAN W. RASMUSON
117638
LICENSED PROFESSIONAL ENGINEER
4/3/24

CERTIFICATE OF INTERESTED PARTIES

FORM 1295

Complete Nos. 1 - 4 and 6 if there are interested parties.
Complete Nos. 1, 2, 3, 5, and 6 if there are no interested parties.

OFFICE USE ONLY
CERTIFICATION OF FILING

Certificate Number:
2025-1264498

Date Filed:
02/04/2025

Date Acknowledged:
02/11/2025

1 Name of business entity filing form, and the city, state and country of the business entity's place of business.

Rosenberg Railroad Museum Incorporated
Rosenberg, TX United States

2 Name of governmental entity or state agency that is a party to the contract for which the form is being filed.

Fort Bend County

3 Provide the identification number used by the governmental entity or state agency to track or identify the contract, and provide a description of the services, goods, or other property to be provided under the contract.

100416
Economic Development Agreement, Rosenberg RR Museum

4 Name of Interested Party	City, State, Country (place of business)	Nature of interest (check applicable)	
		Controlling	Intermediary

5 Check only if there is NO Interested Party. [X]

6 UNSWORN DECLARATION

My name is _____, and my date of birth is _____.

My address is _____, _____, _____, _____, _____.
(street) (city) (state) (zip code) (country)

I declare under penalty of perjury that the foregoing is true and correct.

Executed in _____County, State of _____, on the _____day of _____, 20_____.
(month) (year)

_____
Signature of authorized agent of contracting business entity
(Declarant)