12E

Fort Bend County
Engineering Department
301 Jackson Suite 401
Richmond, Texas 77469
281.633.7500
Permits@fortbendcountytx.gov

REVIEW BY FORT BEND COUNTY COMMISSIONERS COURT

[ ] Right of Way Permit
[X] Commercial Driveway Permit
Permit No: 2018-22583

Applicant: Long & Son, Inc

Job Location Site: 4740 1/2 Harvest Corner Drive, Richmond, TX 77406

Bond No. [redacted] **Date of Bond:** 7/27/2018 **Amount:** $5,000.00

The above applicant came to make use of certain Fort Bend County property subject to, "The Order Regulating the Laying, Construction, Maintenance, and Repair of Buried Cables, Conduits, and Pole Lines, In, Under, Across or Along Roads, Streets, Highways, and Drainage Ditches in Fort Bend County, Texas, Under the Jurisdiction of the Commissioners Court of Fort Bend County, Texas," as passed by the Commissioners Court of Fort Bend County, Texas, of the Minutes of the Commissioners Court of Fort Bend County, Texas, to the extent that such order is not inconsistant with Chapter 181, Vernon's Texas Statutes and Codes Annoted.

Notes:

1. Evidence of review by the Commissioners Court must be kept on the job site and failure to do so constitutes grounds for job shutdown.
2. Written notices are required:
   a. 48 hours in advance of construction start up, and
   b. When construction is completed and ready for final inspection, submit notification to Permit Administrator thru MyGovernmentOnline.org portal.
3. This permit expires one (1) year from date of permit if construction has not commenced.

On this 28th day of August, 2018, Upon Motion of Commissioner Meyers, seconded by Commissioner Morales, duly put and carried, it is ORDERED, ADJUDGED AND DECREED that said notice of said above purpose is hereby acknowledged by the Commissioners Court of Fort Bend County, Texas, and that said notice be placed on record according to the regulation order thereof.

Signature

By: _____
County Engineer

N/A

By: _____
Drainage District Engineer/Manager

Presented to Commissioners Court and approved.

Date Recorded 9-04-2018 Comm. Court No. 12E

Clerk of Commissioners Court

By: _____
Deputy

09/04/2018 Original sent to Sean Eglinton, Engineering dept.

Fort Bend County
Engineering Department
301 Jackson Suite 401
Richmond, Texas 77469
281.633.7500
Permits@fortbendcountytx.gov

PERMIT APPLICATION REVIEW FORM FOR CABLE, CONDUIT, AND POLE LINE ACTIVITY IN FORT BEND COUNTY

[ ] Right of Way Permit

[X] Commercial Driveway Permit

Permit No: 2018-22583

The following "Notice of Proposed Cable, Conduit, and/or Pole Line activity in Fort Bend County" and accompanying attachments have been reviewed and the notice conforms to appropriate regulations set by Commissioner's Court of Fort Bend County, Texas.

(1) COMPLETE APPLICATION FORM:

- [X] a. Name of road, street, and/or drainage ditch affected.
- [X] b. Vicinity map showing course of directions
- [X] c. Plans and specifications

(2) BOND:

- [ ] County Attorney, approval when applicable.
- [ ] Perpetual bond currently posted. Bond No: _____ Amount: _____
- [X] Performance bond submitted. Bond No: [redacted] Amount: $5,000.00
- [ ] Cashier's Check Check No: _____ Amount: _____

(3) DRAINAGE DISTRICT APPROVAL (WHEN APPLICABLE):

Drainage District Approval _____ Date _____

We have reviewed this project and agree it meets minimum requirements.

Permit Administrator _____ Date 8/17/2018

4-Y

5 pgs

2018099663

PERFORMANCE BOND COVERING ALL CABLE, CONDUIT AND/OR POLE LINE ACTIVITY IN, UNDER, ACROSS OR ALONG FORT BEND COUNTY ROAD, COMMERCIAL DRIVEWAY AND MEDIAN OPENINGS OR MODIFICATIONS (AUTHORIZED)

BOND NO [redacted]

THE STATE OF TEXAS §

KNOW ALL MEN BY THESE PRESENTS:

COUNTY OF FORT BEND §

THAT WE, Long & Son, Inc. whose (*address, phone*) is 13014 Queensbury, Houston, Texas 77079, 713-461-7032, hereinafter called the Principal, and Hartford Casualty Insurance Company, a Corporation existing under and by virtue of the laws of the state of Indiana and authorized to do an indemnifying business in the state of Texas, and whose principal office is located at (*name/address/phone*) 3000 Internet Blvd., Suite 600, Frisco, Texas 75034, whose officer residing in the State of Texas, authorized to accept service in all suits and actions brought whining said state is Michael Heidrick and whose address is 3000 Internet Blvd. Suite 600, Frisco, Texas 75034, hereinafter called the Surety, and held and firmly bound unto , Robert E. Hebert, County Judge of Fort Bend County, Texas, or his successors in office, in the full sum of Five Thousand and No/100 Dollars ($ 5,000.00) current, lawful money of the United States of America, to be paid to said Robert E. Hebert, County Judge of Fort Bend County, Texas, or his successors in office, to which payment well and truly to be made and done, we, the undersigned, bind ourselves and each of us, our heirs, executors, administrators, successors, assigns, and legal representatives, jointly and severally, by these presents.

THE CONDITION OF THIS BOND IS SUCH THAT, WHEREAS, the above bounden principal contemplates laying, constructing, maintaining and/or repairing one or more cables, conduits, and/or pole lines in, under, across and/or along roads, streets and highways, commercial driveway and median openings or modifications in the County of Fort Bend, and the State of Texas, under the jurisdiction of the Commissioners' Court of Fort Bend County, Texas, pursuant to the Commissioners' Court order adopted on the 1st day of December, A.D. 1980, recorded in Volume 13, of the Commissioners' Court Minutes of Fort Bend County, Texas, regulating same, which Commissioners' Court order is hereby referred to and made a part hereof for all purposes as though fully set out herein;

AND WHEREAS, the principal desires to provide Fort Bend County with a performance bond covering all such cable, conduit and/or pole line activity, commercial driveway and median openings or modifications;

NOW, THEREFORE, if the above bounden principal shall faithfully perform all its cable, conduit and/or pole line activity (including, but not limited to the laying, construction, maintenance and/or repair of cables, conduits and/or pole lines) in, under, across and/or along roads, streets and highways, commercial driveway and median openings or modifications in the County of Fort Bend and State of Texas, under the jurisdiction of the Commissioners Court of Fort Bend County, Texas, pursuant to and in accordance with minimum requirements and conditions of the above mentioned Commissioners' Court order set forth and specified to be by said principal done and performed, at the time and in the manner therein specified, and shall pay over and make good and reimburse Fort Bend County, all loss and damages which Fort Bend County may sustain by reason of any failure or default on the part of said principal, then this obligation shall be null and void, otherwise to remain in full force and effect.

This bond is payable at the County Courthouse in the County of Fort Bend and State of Texas.

It is understood that at any time Fort Bend County deems itself insecure under this bond, it may require further and/or additional bonds of the principal.

EXECUTED this 27th day of July, 2018.

Long & Son, Inc.
PRINCIPAL

BY

Hartford Casualty Insurance Company
SURETY

BY Gloria Villa, Attorney-in-Fact

CCM 8-28-2018 #12E
Fort Bend County Clerk
Return Admin Serv Coord RAC
Permit # 2018-22583

POWER OF ATTORNEY

Direct Inquiries/Claims to:
THE HARTFORD
BOND, T-12
One Hartford Plaza
Hartford, Connecticut 06155
Bond.Claims@thehartford.com
call: **888-266-3488** *or fax:* **860-757-5835**

KNOW ALL PERSONS BY THESE PRESENTS THAT:

Agency Name: MARSH & MCLENNAN AGENCY LLC
Agency Code: 46-505987

- [X] **Hartford Fire Insurance Company**, a corporation duly organized under the laws of the State of Connecticut
- [X] **Hartford Casualty Insurance Company**, a corporation duly organized under the laws of the State of Indiana
- [X] **Hartford Accident and Indemnity Company**, a corporation duly organized under the laws of the State of Connecticut
- [ ] **Hartford Underwriters Insurance Company**, a corporation duly organized under the laws of the State of Connecticut
- [ ] **Twin City Fire Insurance Company**, a corporation duly organized under the laws of the State of Indiana
- [ ] **Hartford Insurance Company of Illinois**, a corporation duly organized under the laws of the State of Illinois
- [ ] **Hartford Insurance Company of the Midwest**, a corporation duly organized under the laws of the State of Indiana
- [ ] **Hartford Insurance Company of the Southeast,** a corporation duly organized under the laws of the State of Florida

having their home office in Hartford, Connecticut, (hereinafter collectively referred to as the "Companies") do hereby make, constitute and appoint, ***up to the amount of*** Unlimited :

Roxanne G. Brune, Sharen Groppell, Francine Hay, Beverly A. Ireland, Edward L. Moore, Kurt A. Risk, James W. Tomforde, Gloria Villa of Houston TX, C.W. Adams, Sharon Cavanaugh of HOUSTON, Texas

their true and lawful Attorney(s)-in-Fact, each in their separate capacity if more than one is named above, to sign its name as surety(ies) only as delineated above by ☒, and to execute, seal and acknowledge any and all bonds, undertakings, contracts and other written instruments in the nature thereof, on behalf of the Companies in their business of guaranteeing the fidelity of persons, guaranteeing the performance of contracts and executing or guaranteeing bonds and undertakings required or permitted in any actions or proceedings allowed by law.

In Witness Whereof, and as authorized by a Resolution of the Board of Directors of the Companies on May 6, 2015 the Companies have caused these presents to be signed by its Senior Vice President and its corporate seals to be hereto affixed, duly attested by its Assistant Secretary. Further, pursuant to Resolution of the Board of Directors of the Companies, the Companies hereby unambiguously affirm that they are and will be bound by any mechanically applied signatures applied to this Power of Attorney.

John Gray, Assistant Secretary

M. Ross Fisher, Senior Vice President

STATE OF CONNECTICUT
COUNTY OF HARTFORD } ss. Hartford

On this 5th day of January, 2018, before me personally came M. Ross Fisher, to me known, who being by me duly sworn, did depose and say: that he resides in the County of Hartford, State of Connecticut; that he is the Senior Vice President of the Companies, the corporations described in and which executed the above instrument; that he knows the seals of the said corporations; that the seals affixed to the said instrument are such corporate seals; that they were so affixed by authority of the Boards of Directors of said corporations and that he signed his name thereto by like authority.

Kathleen T. Maynard
Notary Public
My Commission Expires July 31, 2021

CERTIFICATE

I, the undersigned, Assistant Vice President of the Companies, DO HEREBY CERTIFY that the above and foregoing is a true and correct copy of the Power of Attorney executed by said Companies, which is still in full force effective as of July 27, 2018.

Signed and sealed at the City of Hartford.

Kevin Heckman, Assistant Vice President

IMPORTANT NOTICE

To obtain information or make a complaint:
You may contact your Agent.

You may call The Hartford's Consumer Affairs toll-free telephone number for information or to make a complaint at:
1-800-451-6944

You may contact the Texas Department of Insurance to obtain information on companies, coverages, rights, or complaints at:
1-800-252-3439

You may write the Texas Department of Insurance:
P.O. Box 149104
Austin, TX 78714-9104
Fax: (512) 490-1007
Web: *www.tdi.texas.gov*
E-mail: *ConsumerProtection@tdi.texas.gov*

PREMIUM OR CLAIM DISPUTES:
Should you have a dispute concerning your premium or about a claim, you should contact the (agent) (company) (agent or the company) first. If the dispute is not resolved, you may contact the Texas Department of Insurance.

ATTACH THIS NOTICE TO YOUR POLICY:
This notice is for information only and does not become a part or condition of the attached document.

IMPORTANT NOTICE

To obtain information or make a complaint:

You may contact your agent.

You may call Hartford Insurance Group at the toll free telephone number for information or to make a complaint at:

1-800-392-7805

You may also write to The Hartford:

The Hartford
Hartford Financial Products
2 Park Avenue, 5th Floor
New York, New York 10016
1-212-277-0400

You may contact the Texas Department of Insurance to obtain information on companies, coverages, rights or complaints at:

1-800-252-3439

You may write the Texas Department of Insurance

P.O. Box 149104
Austin, TX 78714-9104
Fax Number (512) 490-1007
Web: http://www.tdi.state.tx.us
E-mail: ConsumerProtection@tdi.state.tx.us

PREMIUM OR CLAIMS DISPUTES: Should you have a dispute concerning your premium or about a claim you should contact the agent first. If the dispute is not resolved, you may contact the Texas Department of Insurance.

ATTACH THIS NOTICE TO YOUR POLICY: This notice is for your information only and does not become a part or condition of the attached document.

AVISO IMPORTANTE

Para obtener informacion o para someter una queja.

Puede comunicarse con su agente.

Usted puede llamar al numero de telefono gratis de The Hartford Insurance Group para informacion o para someter una queja al

1-800-392-7805

Usted tambien puede escribir a The Hartford.

The Hartford
Hartford Financial Products
2 Park Avenue, 5th Floor
New York, New York 10016
1-212-277-0400

Puede comunicarse con el Departamento de Seguros de Texas para obtener informacion acerca de compañías, coberturas, derechos o quejas al:

1-800-252-3439

Puede escribir al Departamento de Seguros de Texas

P.O. Box 149104
Austin, TX 78714-9104
Fax Number (512) 490-1007
Web: http://www.tdi.state.tx.us
E-mail: ConsumerProtection@tdi.state.tx.us

DISPUTAS SOBRE PRIMAS O RECLAMOS: Si tiene una disputa concerniente a su prima o a un reclamo, debe comunicarse con su agente primero. Si no se resuelve la disputa, puede entonces comunicarse con el departamento (TDI).

UNA ESTE AVISO A SU POLIZA: Este aviso es solo para proposito de informacion y no se convierte en parte o condicion del documento adjunto.

FILED AND RECORDED
OFFICIAL PUBLIC RECORDS

Laura Richard

Laura Richard, County Clerk
Fort Bend County Texas
August 31, 2018 02:35:59 PM
FEE: $0.00 SM **2018099663**

CONSTRUCTION
OF
HARVEST GREEN WATER PLANT No. 1
FOR
FORT BEND COUNTY MUNICIPAL UTILITY DISTRICT No. 134E
FORT BEND COUNTY, TEXAS

NOTES:
These plans were prepared to meet or exceed the specifications and requirements of the City of Houston, Texas and Fort Bend County, Texas as currently amended, whichever is more stringent.
Approval by Fort Bend County will be deemed void if construction has not begun within one year of approval date.
Construction shall not begin before the plat of this section is filed in the Fort Bend County Map Records.
Construction will be monitored by a registered professional engineer of JONES AND CARTER, INC.
Contractor shall notify the Fort Bend County Engineering Department at least 48 hours prior to commencement at construction@fortbendcountytx.gov

ETJ DETENTION PLANS INFORMATION:
1) Storm Water Detention Plans
Is provided in Harvest Green – Phase II Detention
Engineering Firm Jones|Carter
Date signed and approved by Feb 10, 2016 (Fort Bend County Drainage District) and Feb 4, 2016 (City of Houston)
2) Storm Water Drainage Design Report:
Report Title Drainage & Detention Analysis for 658.8 Acre Harvest Green Development on Oyster Creek
Date Jan 16, 2016 Engineering Firm Jones|Carter
Date of Acknowledgment by Dec 15, 2015 (Fort Bend County Drainage District)

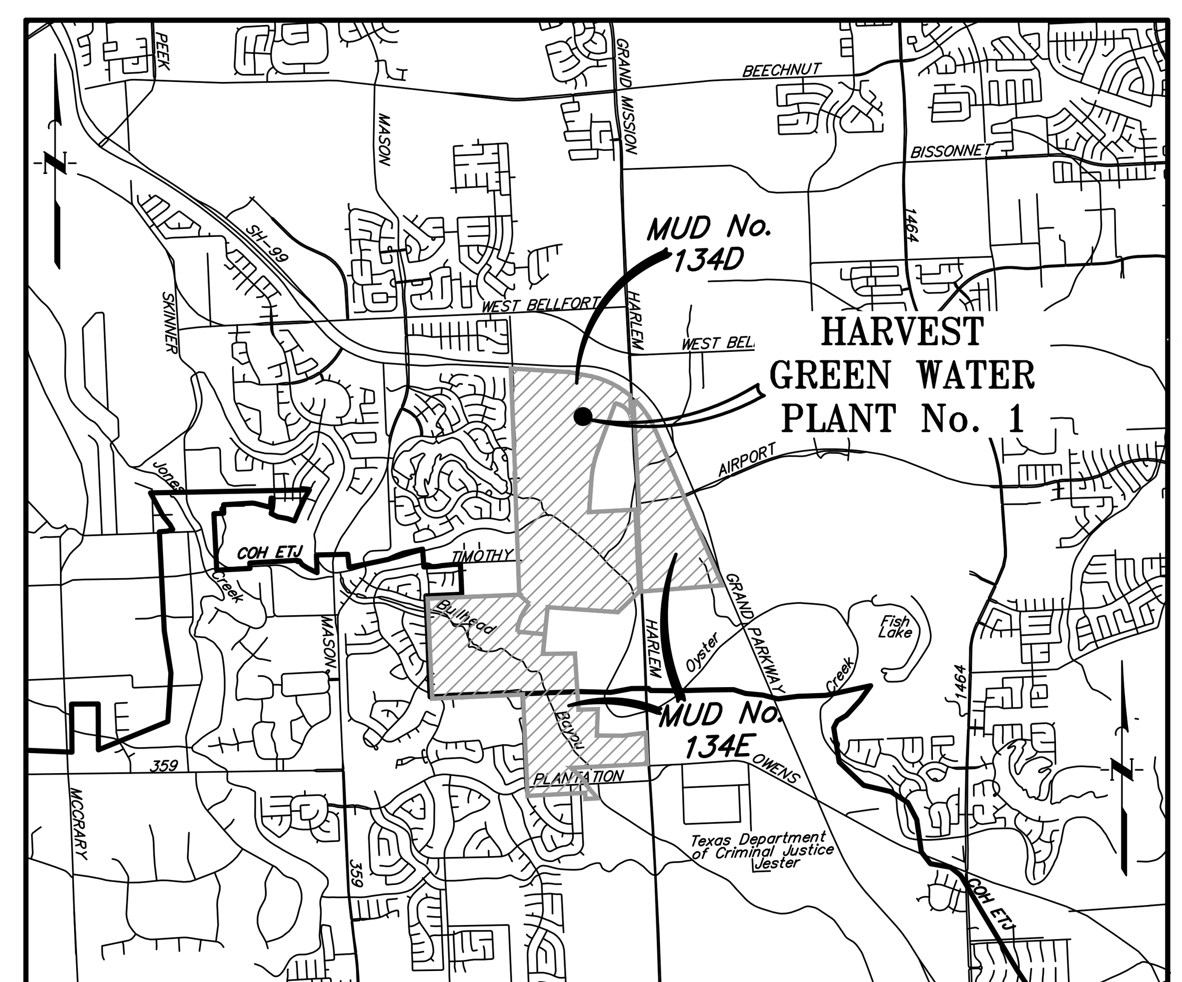

VICINITY MAP
Scale: 1" = 1 Mile

FORT BEND COUNTY KEY MAP: 526–Y
4740 1/2 HARVEST CORNER DR., RICHMOND, TX 77406

I, TOBY W. MCQUEARY, a Professional Engineer licensed in the State of Texas do hereby certify that these plans were prepared under my supervision to meet or exceed the specifications and requirements of Fort Bend County, Texas.

TOBY W. MCQUEARY, P.E. — 4-12-2018 Date

Harvest Green Water Plant No. 1:
Flood Insurance Rate Map
Panel 140 of 575
Map No. 48157C0140L
Base Flood Elev = 83.00'

I, TOBY W. MCQUEARY, a Professional Engineer licensed in the State of Texas do hereby certify that this project is entirely located outside the area with 100–year flood frequency.

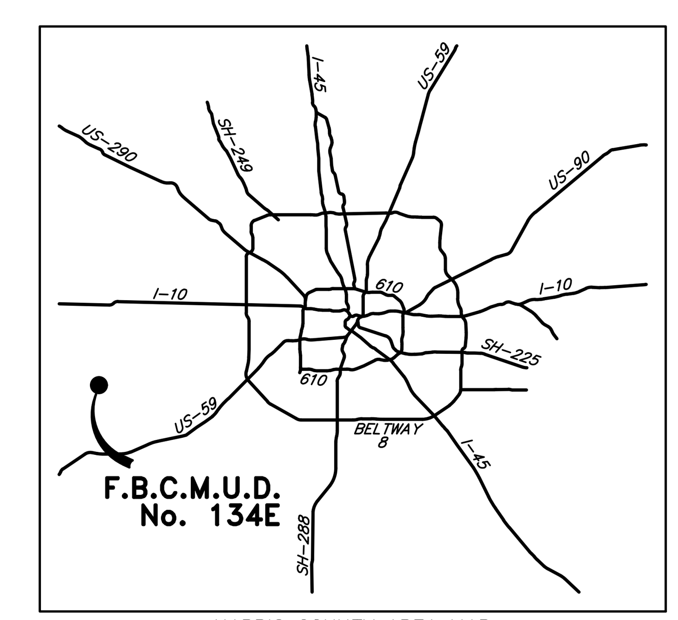

HARRIS COUNTY AREA MAP

ONE–CALL NOTIFICATION SYSTEM
CALL BEFORE YOU DIG!!!
713–223–4567 (In Houston)
(New Statewide Number Outside Houston 1–800–545–6005)

Contractor shall notify the City of Houston, Houston Public Works, Office of the City Engineer, 48 hours before starting work on this project. Telephone No. (832–394–9098)

FORT BEND COUNTY ENGINEER

ENGINEER: Rick J. Staigle, PE, PTOE for RICHARD W. STOLLEIS, P.E.
DATE: 5/21/18
THESE SIGNATURES ARE VOID IF CONSTRUCTION HAS NOT COMMENCED IN ONE (1) YEAR FROM DATE OF APPROVAL.
APPROVED: [signature] DEVELOPMENT COORDINATOR
DATE: 5/21/18

STATE OF TEXAS — TOBY W. McQUEARY — 93710 — LICENSED PROFESSIONAL ENGINEER — 4-12-2018

SURVEYED BY: FB NO.:
NOTE: CITY SIGNATURES VALID FOR ONE YEAR ONLY AFTER DATE OF SIGNATURES

CITY OF HOUSTON
DEPARTMENT OF PUBLIC WORKS AND ENGINEERING

WATER 4/12/18	TRAFFIC & TRANSPORTATION
WASTEWATER 4/12/18	STORM WATER QUALITY
STORM 4/12/18	FACILITIES 041218
STREET & BRIDGE	
CITY ENGINEER 4/12/18	FOR CITY OF HOUSTON USE ONLY CITY DWG NO.
DIRECTOR OF HOUSTON PUBLIC WORKS ~~AND ENGINEERING~~ 4/12/18	ACCEPTED AND FILED 60306 CITY DRAWING NUMBER HOUSTON, TEXAS

NOTE:
This facility is to serve no more than 2,500 ESFC's.

APRIL 2018
JC JOB No. 13889–0002–00

JONES|CARTER
Texas Board of Professional Engineers Registration No. F-439
6330 West Loop South, Suite 150 • Bellaire, TX 77401 • 713.777.5337

ILMS No. 18022931
C.O.H. LOG No. 18–0447

SHEET No: G1
1 OF 47

FORT BEND COUNTY M.U.D. No. 134E – HARVEST GREEN WATER PLANT No. 1

JONES|CARTER
BELLAIRE, TEXAS

INDEX OF DRAWINGS

SHEET No.		GENERAL
1.	G1	COVER SHEET
2.	G2	INDEX OF DRAWINGS
3.	G3	GENERAL CONSTRUCTION NOTES
4.	G4	GENERAL ABBREVIATIONS SHEET
5.	G5	GENERAL SYMBOLS SHEET
		CIVIL
6.	C1	SURVEY CONTROL SHEET
7.	C2	OVERALL SITE LAYOUT
8.	C3	PAVING & GRADING
9.	C4	ENLARGED PIPING PLAN – SHEET 1 OF 2
10.	C5	ENLARGED PIPING PLAN – SHEET 2 OF 2
11.	C6	CIVIL DETAILS – SHEET 1 OF 2
12.	C7	CIVIL DETAILS – SHEET 2 OF 2
13.	C8	STORMWATER POLLUTION PREVENTION PLAN
		MECHANICAL
14.	M1	WATER WELL PROFILE & PIPING
15.	M2	GROUND STORAGE TANK DETAILS – SHEET 1 OF 3
16.	M3	GROUND STORAGE TANK DETAILS – SHEET 2 OF 3
17.	M4	GROUND STORAGE TANK DETAILS – SHEET 3 OF 3
18.	M5	BOOSTER PUMP PIPING & DETAILS
19.	M6	HYDROPNUEMATIC TANK & DETAILS
20.	M7	CONTROL BUILDING & ACCESSORIES DETAILS
21.	M8	MISCELLANEOUS MECHANICAL DETAILS – SHEET 1 OF 2
22.	M9	MISCELLANEOUS MECHANICAL DETAILS – SHEET 2 OF 2
		STRUCTURAL
23.	S1	CONTROL BUILDING & GENERATOR PLANS AND SECTIONS
24.	S2	CONTROL BUILDING STRUCTURAL SECTIONS
25.	S3	BOOSTER PUMP, HPT AND WATER WELL PLANS AND SECTIONS
		ELECTRICAL
26.	E1	ELECTRICAL LEGENDS & SCHEDULES
27.	E2	ELECTRICAL SITE LAYOUT
28.	E3	ELECTRICAL BUILDING POWER LAYOUT
29.	E4	ELECTRICAL BUILDING LIGHTING LAYOUT
30.	E5	ELECTRICAL BUILDING GROUNDING LAYOUT
31.	E6	ELECTRICAL BOOSTER PUMPS & WATER WELL NO. 1 LAYOUTS
32.	E7	ELECTRICAL CONDUIT SCHEDULE – SHEET 1 OF 2
33.	E8	ELECTRICAL CONDUIT SCHEDULE – SHEET 2 OF 2
34.	E9	ELECTRICAL ONE LINE DIAGRAM
35.	E10	ELECTRICAL CONTROL DIAGRAM – SHEET 1 OF 3
36.	E11	ELECTRICAL CONTROL DIAGRAM – SHEET 2 OF 3
37.	E12	ELECTRICAL CONTROL DIAGRAM – SHEET 3 OF 3
38.	E13	ELECTRICAL DETAILS – SHEET 1 OF 3
39.	E14	ELECTRICAL DETAILS – SHEET 2 OF 3
40.	E15	ELECTRICAL DETAILS – SHEET 3 OF 3
		INSTRUMENTATION & CONTROLS
41.	I1	WATER WELL No. 1 P&ID
42.	I2	GROUND STORAGE TANK P&ID
43.	I3	BOOSTER PUMPS P&ID
44.	I4	HYDROPNEUMATIC TANKS P&ID
45.	I5	CHLORINE DISINFECTION SYSTEM P&ID
46.	I6	CHEMICAL FEED SYSTEMS P&ID
		ONE–QUARTER MILE RADIUS MAP
47.	O1	ONE–QUARTER MILE RADIUS WATER WELL LOCATION MAP

APPROVED: _____ F.B.C. DEVELOPMENT COORDINATOR

DATE: 5/21/18

NO.	DATE	REVISIONS	APP.
1	05/30/18	ISSUED FOR CONSTRUCTION	TWM

FORT BEND COUNTY M.U.D. No. 134E
FORT BEND COUNTY, TEXAS

JONES | CARTER
Texas Board of Professional Engineers Registration No. F-439
6330 West Loop South, Suite 150 • Bellaire, TX 77401 • 713.777.5337

HARVEST GREEN
WATER PLANT No. 1

INDEX OF DRAWINGS

NOTE: CITY SIGNATURES VALID FOR ONE YEAR ONLY AFTER DATE OF SIGNATURES

CITY OF HOUSTON
DEPARTMENT OF PUBLIC WORKS AND ENGINEERING

WATER	04/12/18	TRAFFIC & TRANSPORTATION	
WASTEWATER	4/12/18	STORM WATER QUALITY	
STORM		FACILITIES	04/12/18
STREET & BRIDGE			

FILE NO:
JOB NO: 13889-0002-00

DATE: April 2018
DGN. BY: MRKILLARY
DWG. BY: JASTRUHAR

SCALE: NO SCALE

G2
SHEET No. 2 OF 47

FOR CITY OF HOUSTON USE ONLY
CITY DWG NO.

ACCEPTED AND FILED
60306
CITY DRAWING NUMBER
HOUSTON, TEXAS

STATE OF TEXAS
TOBY W. McQUEARY
99710
LICENSED PROFESSIONAL ENGINEER

4-12-2018

GENERAL CONSTRUCTION NOTES

1. Prior to bidding this project, the Contractor shall inspect the work site to field verify that the above and below ground conditions of the site are acceptable for construction. Contractor shall refer to the General Conditions for requirements on handling concerns.
2. The Contractor shall be fully responsible for protecting, maintaining, and restoring all existing public or private utilities, including but not limited to paving, waterlines, wastewater collection systems, storm sewer systems and traffic/street signs, or any off–site areas, affected by this construction project. All damaged facilities shall be repaired or restored to existing or better condition, unless otherwise noted, at no additional cost to the Public or the District (Owner).
3. Hand dig as required around existing utilities. The Contractor shall be fully responsible for any and all damage to existing electrical, control and utility lines during construction. The current Owner of any existing utilities disturbed during construction of this project shall be notified immediately of any damages and lines shall be repaired in a timely manner to avoid any lengthy disruption of service. Repairs shall be made at no cost to the Public or the Owner.
4. The approximate location of existing utilities are given for reference only. Before commencing the work on this contract, the Contractor shall verify by field investigation the actual locations of all utility facilities within and adjacent to the limits of the work that may be affected by the work. Conflicts which result due to negligence by the Contractor to locate, horizontally and vertically, existing utilities which are shown on the construction drawings, or which the Contractor has been given notice or has knowledge, shall be the sole responsibility of the Contractor. The cost of remedial work, removal of portions of the work or extensive design changes occasioned by the failure of the Contractor to verify the location of existing utilities as described above shall be borne by the Contractor.
5. Contractor is to contact Texas 811 (DIG TESS Co.) at 811, 713–223–4567 or at 1–(800) 344–8377 for location of existing facilities that may not be shown on the plans at least 24 hours prior to commencement of any construction activities.
6. Contractor shall obtain all applicable City, County, State, and Federal permits. Contractor shall provide copies of all obtained permits to the Construction Office of Jones|Carter.
7. Contractor shall provide sheeting, shoring, bracing, and trench safety systems necessary to protect workmen, utilities, and/or structures during all phases of construction as may be required by O.S.H.A. Regulations and Federal, State, and local laws, codes, and ordinances.
8. When trench condition warrants the use of dewatering systems, their use shall be requested by the Contractor and approved by the Engineer prior to installation.
9. This project is located within the City of Houston ETJ and Fort Bend County, Texas.
10. Contractor shall keep existing streets and roads open to all traffic and cleaned daily of material deposited by construction vehicles. Material that is hazardous to traffic shall be removed immediately. Any temporary facilities needed to maintain roadway accessibility during construction operations shall be incidental to the contract.
11. During construction, the Contractor shall maintain adequate drainage and safe access to adjacent properties at all times, regardless of the weather conditions, at no additional cost to the Owner, whether by grading or pumping. Do not obstruct roadways, drainageways, sidewalks or passageways adjacent to the construction area.
12. Maintain twelve (12) inch minimum out–to–out clearance between all waterlines, storm sewers, culverts, and private utility lines, other than sanitary sewers, unless otherwise noted.
13. Adequate drainage shall be maintained at all times during construction and any drainage ditch or structure disturbed during construction shall be restored to the satisfaction of the Owning Authority. All construction storm runoff shall comply with the latest applicable rules and regulations of Fort Bend County, Texas; the Fort Bend County Drainage District; and the "STORM WATER POLLUTION PREVENTION PLAN (SWP3)" section of the Contract Specifications; all in compliance with the "NATIONAL POLLUTANTS DISCHARGE ELIMINATION SYSTEM" (NPDES) requirements.
14. The Contractor shall perform work in a manner to limit noise from construction to acceptable levels for properties adjacent to construction area.
15. The Contractor shall be responsible for safeguarding and protecting all material and equipment stored on the job site. The Contractor shall be responsible for the storage of materials in a safe and workmanlike manner to prevent injuries, during and after working hours, until project acceptance.
16. The Contractor shall only clear and grub areas within the project construction area of the water plant site boundary lines as required to construct the proposed plant facilities, unless directed otherwise by the Owner or Engineer. Unless otherwise specified, all cleared and grubbed material becomes the property of the Contractor to be removed from the plant site or disposed of in a manner not to damage the Owner. Burning or burying of cleared and grubbed materials on the Owner's property is not permitted.
17. The Contractor is responsible for providing "red line" record drawings and "Operation & Maintainence" (O&M) manuals at the completion of this project, as per the Contract Specifications, prior to final payment.
18. Contractor to contact Mr. Albert M. Lazcano, PE with Jones|Carter at (713) 777–5337 at least 48 hours prior to mobilization.

GRADING NOTES:

1. After completion of fill area preparation, fill shall be placed in maximum loose lifts of eight inches (8") or less and compacted to a minimum density of 95% of optimum density in accordance with ASTM D–698 at ±2% optimum moisture content.
2. Should soft unstable areas appear in the site during the course of site grading, the Contractor shall remove unstable material as directed by the Engineer. The Contractor shall replace this with a suitable material compacted as required above. (No separate pay)
3. Final payment shall be contingent on the Engineer's verification that site grading is in accordance with the plan and that soil compaction tests were performed as required.
4. Final grade all areas of the site after completion of all other construction activities. Grade all areas of the site smooth to drain. Thoroughly clean site to remove all construction debris such as concrete, rubble, rebar, etc.

WATER PLANT CONSTRUCTION NOTES

1. Project staking and establishment of control points will be provided by the Client or their representative. The Contractor will be responsible for coordinating this work with the Field Project Representative (FPR).
2. All internal plant piping shall be ductile iron pipe (DIP), welded steel pipe (WSP), or C–900 polyvinyl chloride pipe (PVC) rated for an internal working pressure of 150 psi. Pipe used with flanged connections shall be thickness Class 53 (minimum). Pipe used with mechanical joint connections shall be thickness Class 52 (minimum). All piping shall be supplied and installed in accordance with the latest revision of AWWA C151 and C600. Waterline fittings shall be cast or ductile iron unless otherwise noted.
3. Flanged connections and/or mechanical joint connections shall be rated for an internal working pressure of 150 psi. All flanges shall be supplied and installed in accordance with the latest revision of AWWA C115.
4. All aboveground ductile iron pipe (DIP) connections shall be flanged. The first underground DIP connection shall be flanged. All other underground DIP connections shall be restrained mechanical joints unless otherwise noted.
5. All underground flanges shall have stainless steel bolts and nuts.
6. All internal water plant valves shall open counterclockwise. All water valves shall be supplied and installed in accordance with the latest revisions of AWWA C509 and C504. All external water plant valves shall open clockwise.
7. All aboveground valves 12–inch (12") and smaller shall be flanged outside screw and yoke (OS&Y) gate valves with resilient seats, gasketed, and handwheel operators. All aboveground valves larger than 12–inch (12") shall be gasketed, flanged water butterfly valves. All aboveground butterfly valves shall have a post indicator and handwheel.
8. All underground valves 12–inch (12") and smaller shall be mechanical joint, non–rising stem (NRS) gate valves with resilient seats, gasketed, and 2–inch (2") square operating nuts, except where flanged ends are called out on the plans.
9. All buried valves are to be equipped with valve boxes adjusted to their final elevation after finished grading is complete.
10. Six–inch (6") to 12–inch (12") water lines shall have a minimum cover of four feet (4').
11. The interior and exterior of ductile iron pipe shall be coated as specified in Sections 15600 and 09920 of the Contract Specifications. The exterior of underground welded steel pipe shall be coated with a cold applied tape in accordance with AWWA C209 and as specified in Section 15600.
12. All pressure/altitude gauges shall be 4–inch (4") face diameter, liquid filled, stainless steel case with ½–inch (½") bottom connection and ½–inch (½") stainless steel shut–off ball valve.
13. Concrete thrust blocks shall be provided at all underground tees, bends, laterals, and plugs except for locations where restrained mechanical joints are used. They shall be constructed in accordance with the details in the Contract Construction Drawings and Specifications to prevent pipe movement.
14. Provide isolation joints between all proposed sidewalks, slabs, structures, and pavement. Also provide isolation joints where pipes penetrate slabs or pavement unless otherwise noted on the drawings. Isolation joints shall be constructed as shown in the Contract Construction Drawings unless directed otherwise by the Engineer.
15. Provide protective coatings for all the proposed water plant facilities in accordance with Sections 09920 and 15600 of the Contract Specifications. See Section 09920 for a list of specific items included in this construction project. Provide other protective coatings, such as hot–dipped galvanizing, as indicated in the Contract Construction Drawings and Specifications. Touch up areas damaged during construction as specified.
16. All newly installed pipes, coatings, and related products shall conform to American National Standards Institute/National Sanitation Foundation International (ANSI/NSF) standards and must be certified by an organization accredited by ANSI. All these materials must be NSF Standard 60 and 61 certified.
17. All waste materials shall be removed from the site and properly disposed of by the Contractor. Excess soil material shall be removed from the site and properly disposed of unless otherwise directed.
18. Hydro–mulch seed all disturbed areas on, or adjacent to, the water plant site in accordance with Section 02801 of the Contract Specifications.
19. Reinforcing welded wire fabric will be provided in sheets. Rolled welded wire fabric is not allowed.
20. Waterlines shall be constructed so that all crosses, tees, and valves are not located under pavement or future facilities unless directed otherwise by the Engineer.
21. All existing and proposed plant piping, conduit, or duct bank crossings shall be constructed with a minimum of 12–inches (12") clearance between outside surfaces of the said crossing utilities unless directed otherwise by the Engineer.
22. Waterlines shall be bank sand bedded and backfilled in accordance with the details included in the Contract Construction Drawings and Specifications.
23. Isolation kits are required between all dissimilar metals.
24. All plant piping under or within one foot (1') of future, proposed or existing pavement shall be backfilled with 1–1/2 sack/CY cement–sand to a point immediately below the subgrade. Backfill remaining depth with suitable material in 8–inch (8") lifts compacted to 95% standard proctor density per AASHTO test Method T–99. Moisture content shall be as specified. (No Separate Pay)
25. Contractor shall drill holes through building walls for proposed piping or electrical conduit a minimum of 1/2" larger in diameter than the pipe or conduit diameter being installed. All wall penetrations shall be sealed with approved non–shrink grout per the Contract Specifications.
26. Grade surrounding areas to drain away from proposed slabs.
27. All proposed underground plant piping shall be pressure tested in accordance with Section 15600 of the Contract Specifications. Contractor shall provide all temporary bulkheads, valves, caps or plugs, etc. at no additional cost. Contractor shall provide a certified copy of the test reports.
28. Contractor must submit for approval any changes to proposed underground duct bank routing.

EROSION AND SEDIMENTATION CONTROL NOTES

1. Prior to start of construction, Contractor shall install erosion and sedimentation controls at locations shown on the site layout sheets.
2. Contractor shall inspect all erosion and sedimentation control systems specified herein, at a minimum of once a week.
3. Contractor shall maintain, repair and/or replace damaged erosion and sedimentation control system throughout the duration of the contract (No separate pay).
4. Contractor shall provide protected storage areas for chemicals, paints, solvents, fertilizers, and other potentially toxic materials.
5. Contractor shall locate fuel/material storage areas away from storm water conveyance systems. Contractor shall use silt fencing, hay bales, or berms around fuel storage areas (No separate pay).
6. Contractor shall advise Owner immediately, verbally, and in writing, of any fuel or toxic material spills onto the project/construction area and the action taken to remedy the problem.
7. Contractor is responsible for disposing of his fuels, materials, and contaminated excavations in a legally approved manner (No separate pay).
8. Contractor is responsible for complying with all applicable environmental laws.
9. Contractor is responsible for providing adequately maintained sanitary facilities.
10. At completion of the contract, the Owner and/or Owner's representative with the Contractor shall examine erosion and sedimentation control system before relieving Contractor of his maintenance responsibilities.
11. Contractor shall be responsible for street cleaning, on a daily basis, of all mud and dirt deposited on the existing pavement due to his construction activity.

FORT BEND COUNTY GENERAL NOTES:

1. Fort Bend County must be invited to the Pre–Construction Meeting.
2. Contractor shall notify Fort Bend County Engineering Department 48 hours prior to commencing construction and a 48 hour notice to any construction activity within the limits of the paving at Construction@fortbendcountytx.gov.
3. Contractor is responsible for obtaining all permits required from Fort Bend County prior to commencing construction of any improvements within County road right of ways.
4. All paving improvements shall be constructed in accordance with Fort Bend County "Rules, Regulations and Requirements" relating to the Approval and Acceptance of Improvements in Subdivisions as currently amended.
5. All road widths, curb radii and curb alignment shown indicated back of curb.
6. A continuous longitudinal reinforcing bar shall be used in the curbs.
7. All concrete pavement shall be 5 1/2 sack cement with a minimum compressive strength of 3500 psi at 28 days. Transverse expansion joints shall be installed at each curb return and at a maximum spacing of 60 feet.
8. All weather access to all existing streets and driveways shall be maintained at all times.
9. 4"x12' reinforced concrete curb shall be placed in front of single family lots only. All other areas shall be 6" reinforced concrete curb.
10. At all intersection locations, Type 7 ramps shall be placed in accordance with TXDOT Ped–12a standard detail sheet. A.D.A. – Handicap ramps shall be installed with street paving at all intersections and comply with current A.D.A. regulations.
11. Curb headers are required at curb connections to Handicap Ramps, with no construction joint within 5' of ramps.
12. All intersections utilizing Traffic Control measures shall have A.D.A wheel chair ramps installed.
13. Guidelines are set forth in the "Texas Manual on Uniform Traffic Control Devices", as currently amended, shall be observed. The Contractor shall be responsible for providing adequate flagmen, signing, striping and warning devices, etc., during construction – both day and night.
14. All R1–1 stop signs shall be 30"x30" with diamond grade sheeting per Texas manual on uniform traffic control devices.
15. Street name signage shall be on 9" high sign flat blade w/reflective green background. Street names shall be upper and lower case lettering with uppercase letters of 6" minimum and lowercase letters of 4.5" minimum. The letters shall be reflective white. Street name signs shall be mounted on stop sign posts. with diamond grade sheeting.
16. A Blue Double Reflectorized button shall be placed at all Fire Hydrant locations. The Button shall be placed 12 inches off of the centerline of the street on the same side as the hydrant.

NOTE: Fort Bend County notes supersede any conflicting notes.

Inspection. The Project and all parts thereof shall be subject to inspection from time to time by inspectors designated by Fort Bend County. No such inspections shall relieve the Contractor of any of its obligations hereunder. Neither failure to inspect nor failure to discover or reject any of the work as not in accordance with the drawings and specifications, requirements and specifications of Fort Bend County or any provision of this Project shall be construed to imply an acceptance of such work or to relieve the Contractor of any of its obligations hereunder.

STANDARD CITY OF HOUSTON CONSTRUCTION NOTES:

1. Wastewater collection systems, water, paving, traffic signals, drainage systems and all groundwater plant facilities shall be constructed in accordance with the most current editions of the following City of Houston documents. These documents are "STANDARD CONSTRUCTION SPECIFICATIONS" (most recent issue July 2016) and "STANDARD CONSTRUCTION DETAILS FOR WASTEWATER COLLECTION SYSTEMS, WATER LINES, STORM DRAINAGE AND STREET PAVING" (most recent issue November 2005) with all subsequent amendments added thereto unless otherwise noted and approved on these plans. The design must agree with the minimum standards established in the "INFRASTRUCTURE DESIGN MANUAL" (most recent issue July 2015). Note that plan signatures and letters of capacity availability for storm, wastewater and water expire after one (1) year and the latest editions of design rules, specifications, standard details and manuals shall govern as of the dates for resigning. It is the responsibility of the Contractor to verify that he/she has the most recent editions as of the date of construction. These documents may be obtained from the City of Houston Department of Public Works, 611 Walker, Houston, Texas.
2. Groundwater plants have been designed in accordance with the City of Houston, Department of Public Works and Engineering's "GROUNDWATER PLANT DESIGN GUIDELINES" manual dated January 2011. The standards required in the "GROUNDWATER PLANT DESIGN GUIDELINES" manual shall supercede those of the "INFRASTRUCTURE DESIGN MANUAL" when in conflict.
3. The Contractor shall be fully responsible for any and all damage to existing public or private utility lines, including but not limited to paving, water lines, wastewater collection systems, storm sewers and traffic signals during construction. All damages shall be repaired in accordance with the most current editions of the City of Houston standard construction specifications, design details and design manuals. Repairs shall be made at no cost to the City of Houston, the Public or the Owner.
4. The Contractor shall notify City of Houston Department of Public Works and Engineering by both phone and registered letter 48 hours prior to construction at 832–394–9098.

CAUTION: UNDERGROUND GAS FACILITIES

Locations of CenterPoint Energy main lines (to include CenterPoint Energy, Intrastate Pipeline, LLC. where applicable) are shown in an approximate location only. Service lines are usually not shown. Our signature on these plans only indicates that our facilities are shown in approximate location. It does not imply that a conflict analysis has been made. The contractor shall contact the Utility Coordinating Committee at 1–800–545–6005 or 811 a minimum of 48 hours prior to construction to have main and service lines field located.

- When CenterPoint Energy pipe line markings are not visible, call (713) 945–8036 or (713) 945–8037 (7:00 a.m. to 4:30 p.m.) for status of line location request before excavation begins.
- When excavating within eighteen inches (18") of the indicated location of CenterPoint Energy facilities, all excavation must be accomplished using non–mechanized excavation procedures.
- When CenterPoint Energy facilities are exposed, sufficient support must be provided to the facilities to prevent excessive stress on the piping.
- For emergencies regarding gas lines call (713) 659–3552 or (713) 207–4200.

The contractor is fully responsible for any damages caused by his failure to exactly locate and preserve these underground facilities.

WARNING: OVERHEAD ELECTRICAL LINES

Overhead lines may exist on the property. The location of overhead lines has not been shown on these drawings as the lines are clearly visible, but you should locate them prior to beginning any construction. Texas law, Section 752, Health & Safety Code forbids activities that occur in close proximity to high voltage lines, specifically:

- Any activity where person or things may come within six (6) feet of live overhead high voltage lines; and
- Operating a crane, derrick, power shovel, drilling rig, pile driver, hoisting equipment, or similar apparatus within 10 feet of live overhead high voltage lines.

Parties responsible for the work, including contractors, are legally responsible for the safety of construction workers under this law. This law carries both criminal and civil liability. To arrange for lines to be turned off or removed call (713) 207–2222.

ACTIVITIES ON OR ACROSS CENTERPOINT ENERGY FEE or EASEMENT PROPERTY

No approval to use, cross or occupy CenterPoint Energy fee or easement property is given. If you need to use CenterPoint property, please contact our Surveying & Right of Way Division at (713) 207–6348 or (713) 207–5769.

4-12-2018

STATE OF TEXAS — TOBY W. McQUEARY — 93710 — LICENSED PROFESSIONAL ENGINEER

APPROVED: _____ F.B.C. DEVELOPMENT COORDINATOR

DATE: 5/21/18

NO.	DATE	REVISIONS	APP.
1	05/30/18	ISSUED FOR CONSTRUCTION	TWM

FORT BEND COUNTY M.U.D. No. 134E
FORT BEND COUNTY, TEXAS

JONES|CARTER
Texas Board of Professional Engineers Registration No. F-439
6330 West Loop South, Suite 150 • Bellaire, TX 77401 • 713.777.5337

HARVEST GREEN
WATER PLANT No. 1

GENERAL CONSTRUCTION NOTES

NOTE: CITY SIGNATURES VALID FOR ONE YEAR ONLY AFTER DATE OF SIGNATURES

CITY OF HOUSTON
DEPARTMENT OF PUBLIC WORKS AND ENGINEERING

WATER / WASTEWATER 04/21/18	TRAFFIC & TRANSPORTATION
STORM 4/20/18	STORM WATER QUALITY
STREET & BRIDGE	FACILITIES 04/21/18

FILE NO:
JOB NO: 13889–0002–00
DATE: April 2018
DGN. BY: MRKILLARY
DWG. BY: JASTRUHAR
SCALE: NO SCALE

FOR CITY OF HOUSTON USE ONLY
CITY DWG NO.
PUBLIC WORKS AND ENGINEERING — 60306 — CITY DRAWING NUMBER — HOUSTON, TEXAS

G3
SHEET No. 3 OF 47

0 1 2 3 4 5 ORIGINAL SCALE IN INCHES FOR REDUCED PLANS

CONFORMED DOCUMENTS

EQUIPMENT ABBREVIATIONS:

AIRC	AIR COMPRESSOR
ASV	AUTOMATIC SWITCHOVER VALVE
AT	AERATION TOWER
CAF	COALESCING AIR FILTER
CC	CALIBRATION COLUMN
CFP	CENTRIFUGAL PUMP
CLR	CHLORINATOR
DP	DIAPHRAGM PUMP
DWT	DOUBLE WALL STORAGE TANK
EFAN	EXHAUST FAN
EST	ELEVATED STORAGE TANK
EWS	EMERGENCY EYEWASH & SHOWER
FLT	FLOATS
GEN	GENERATOR
GLS	GAS LEAK SENSOR
GST	GROUND STORAGE TANK
HEP	HORIZONTAL END-SUCTION PUMP
HPT	HYDROPNEUMATIC TANK
HST	HOIST
INJ	INJECTOR
IQ	INJECTOR QUILL
JIB	JIBB CRANE
LC	LOAD CELL
LCP	LOCAL CONTROL PANEL
LVR	LOUVER
MR	MONORAIL
MXR	MIXER
PD	PULSATION DAMPENER
PSP	PERISTALTIC PUMP
RTM	ROTAMETER
RTV	ROTAMETER WITH INTEGRAL MANUAL VALVE
SCHP	SPLIT-CASE HORIZONTAL PUMP
SFAN	SUPPLY FAN
SHTR	SPACE HEATER
SM	SUBMERSIBLE MIXER
SNP	SOLENOID PUMP
STMX	STATIC MIXER
SWT	SINGLE WALL STORAGE TANK
TB	TRAVELING BRIDGE
TLY	TROLLEY
VLF	VACUUM LIQUID FEEDER
VLP	VERTICAL LINESHAFT PUMP
VLT	VERTICAL TURBINE PUMP
VR	VACUUM REGULATOR
WCH	WINCH

FLUID ABBREVIATIONS:

AIR	AIR
CI	CORROSION INHIBITOR
CLG	CHLORINE GAS
CLS	CHLORINE SOLUTION
DR	DRAIN LINE
FA	FOUL AIR
FRA	FRESH AIR
HFS	HYDROFLUOROSILICIC ACID
LAS	LIQUID AMMONIUM SULFATE
OF	OVERFLOW
PPH	POLYPHOSPHATE
PW	POTABLE WATER
RAW	RAW WATER
SH	SODIUM HYPOCHLORITE (BLEACH)
STM	STORM SEWER

GENERAL ABBREVIATIONS:

AC	ACRES
CL	CENTERLINE
CFM	CUBIC FEET PER MINUTE
EL	ELEVATION
FF	FINISHED FLOOR
FM	FORCE MAIN
FPS	FEET PER SECOND
FT	FEET
GAL	GALLONS
GPD	GALLONS PER DAY
GPH	GALLONS PER HOUR
GPM	GALLONS PER MINUTE
HOA	HAND OFF AUTO
HP	HORSE POWER
HR	HOUR
LF	LINEAR FEET
mA	MILLIAMP
MH	MANHOLE
OFB	OVERFLOW BAFFLE
PP	POWER POLE
ROW	RIGHT-OF-WAY
SMC	SAMPLE COCK
SAN	SANITARY SEWER
SCH	SCHEDULE
SF	SQUARE FEET
TDH	TOTAL DYNAMIC HEAD
TOB	TOP OF BANK
TOC	TOP OF CONCRETE
TOE	TOE OF SLOPE
TOS	TOP OF SLAB
TOW	TOP OF WALL
TPD	TELEPHONE PEDESTAL
TSP	TELEPHONE SERVICE POLE
TSS	TOTAL SUSPENDED SOLIDS
UFB	UNDERFLOW BAFFLE
UGE	UNDERGROUND ELECTRIC
V	VOLTS
VOL	VOLUME
WM	WATER METER

GATES, VALVES & FITTINGS ABBREVIATIONS:

3WV	THREE WAY VALVE
ARV	AIR RELEASE VALVE
AVV	AIR & VACUUM VALVE
BCV	BALL CHECK VALVE
BF	BLIND FLANGE
BFV	BUTTERFLY VALVE
BPV	BACKPRESSURE VALVE
BS	BASKET STRAINER
BV	BALL VALVE
CCV	CUSHION CHECK VALVE
DAE	DOUBLE ARCH EXPANSION JOINT
DBP	DOUBLE DISC BACKFLOW PREVENTER
DCV	DOUBLE DISC CHECK VALVE
DDC	DOUBLE DETECTOR CHECK
DGV	DEGASSING VALVE
DJ	DISMANTLING JOINT
DV	DIAPHRAGM VALVE
EC	EXPANSION COUPLING
FAC	FLANGED ADAPTER COUPLING
FPV	FLAP VALVE
FTV	FOOT VALVE
GLB	GLOBE VALVE
GV	GATE VALVE
HB	HOSE BIBB
KGV	KNIFE GATE VALVE
MC	MECHANICAL COUPLING
MQC	MALE CAM & GROOVE QUICK COUPLING
NRS	NON-RISING STEM
NV	NEEDLE VALVE
OSY	OUTSIDE STEM & YOKE
PG	PULL GATE
PNV	PINCH VALVE
PR	PRESSURE REDUCING VALVE
PRV	PRESSURE RELIEF VALVE
PSV	PRESSURE SUSTAINING VALVE
PV	PLUG VALVE
RPZ	REDUCED PRESSURE ZONE BACKFLOW PREVENTER
SC	SAMPLE COCK
SCK	SILENT CHECK VALVE
SCV	SWING CHECK VALVE
SLC	SLEEVE COUPLING
SV	SOLENOID VALVE
TBA	TUBING ADAPTER
UN	UNION
VB	VACUUM BREAKER
WYS	WYE STRAINER

MATERIAL ABBREVIATIONS:

CFRP	CENTRIFUGALLY CAST FIBER REINFORCED PIPE
CMP	CORRUGATED METAL PIPE
DI	DUCTILE IRON
FRP	FIBERGLASS REINFORCED PLASTIC
GS	GALVANIZED STEEL
HDG	HOT DIP GALVANIZED
HDPE	HIGH-DENSITY POLYETHYLENE
PE	POLYETHYLENE
PVC	POLYVINYL CHLORIDE
RC	REINFORCED CONCRETE
SS	STAINLESS STEEL
ST	STEEL
WS	WELDED STEEL

INSTRUMENTATION ABBREVIATIONS:

A/H	AUTO/HAND
DC	FULL VOLTAGE DISCONNECT
DOP	DOPPLER FLOW METER
ES	EMERGENCY STOP
H/O/A	HAND/OFF/AUTO
H/O/R	HAND/OFF/REMOTE
L/A	LOCAL/AUTO
L/C	LOCAL/COMPUTER
L/O/C	LOCAL/OFF/COMPUTER
L/O/R	LOCAL/OFF/REMOTE
L/R	LOCAL/REMOTE
LS	LOCK STOP
LSR	LASER LEVEL TRANSDUCER
MAG	ELECTROMAGNETIC FLOWMETER
N/B	NORMAL/BYPASS
O/O	ON/OFF
O/C	OPEN/CLOSE
O/C/LOS	OPEN/CLOSE/LOCK-OUT-STOP
O/C/S	OPEN/CLOSE/STOP
O/C/S/C	OPEN/CLOSE/STOP/COMPUTER
O/H/C	OPEN/HOLD/CLOSE
O/O/A	ON/OFF/AUTO
O/O/C	ON/OFF/COMPUTER
PRP	PROPELLER OR TURBINE FLOWMETER
RAD	RADAR LEVEL TRANSDUCER
R/S/L	RAISE/STOP/LOWER
S/S	STOP/START
SUB	SUBMERSIBLE LEVEL TRANSDUCER
TRM	THERMAL MASS FLOWMETER
TRT	TRANSIT TIME FLOWMETER
ULT	ULTRASONIC LEVEL TRANSDUCER

ANALYZER ABBREVIATIONS:

AM	AMMONIA
FC	FREE CHLORINE
MONO	MONOCHLORAMINE
PH	POTENTIAL OF HYDROGEN
TC	TOTAL CHLORINE
TEMP	TEMPERATURE

PIPING LABELS:

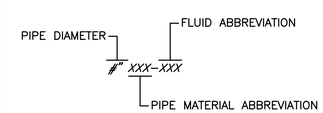

DEVICE IDENTIFICATION LEGEND

FIRST LETTER			SUCCEEDING LETTERS		
MEASURED OR INITIATING VARIABLE		MODIFIER	READOUT OR PASSIVE FUNCTION	OUTPUT FUNCTION	MODIFIER
A	ANALYSIS		ALARM		
B	BURNER, COMBUSTION				
C	CONDUCTIVITY			CONTROL	CLOSED
D	DENSITY	DIFFERENTIAL			
E	VOLTAGE		PRIMARY ELEMENT		
F	FLOW RATE	RATIO (FRACTION)			
G	GAUGE		GLASS, VIEWING DEVICE		
H	HAND (MANUAL)				HIGH
I	CURRENT (ELECTRICAL)		INDICATE		
J	POWER	SCAN			
K	TIME, TIME SCHED.	TIME RATE OF CHANGE		CONTROL STATION	
L	LEVEL		LIGHT		LOW
M	MOTION	MOMENTARY			MIDDLE
N	INTRUSION				NORMAL
O	TORQUE		ORIFICE, RESTRICTION		OPENED
P	PRESSURE, VACUUM		POINT CONNECTION		
Q	QUANTITY	INTEGRATE, TOTALIZE			
R	RADIATION		RECORD OR PRINT		
S	SPEED, FREQUENCY	SAFETY		SWITCH	
T	TEMPERATURE			TRANSMIT	
U	MULTIVARIABLE		MULTIFUNCTION	MULTIFUNCTION	MULTIFUNCTION
V	VIBRATION			VALVE, LOUVER	
W	WEIGHT, FORCE		WELL		
X	UNCLASSIFIED	X-AXIS	UNCLASSIFIED	UNCLASSIFIED	UNCLASSIFIED
Y	EVENT, STATE OF PRESENCE	Y-AXIS		RELAY, COMPUTE CONVERT	
Z	POSITION	Z-AXIS		DRIVER, ACTUATOR, FINAL CONTROL ELEMENT	

GENERAL INSTRUMENT & FUNCTION SYMBOLS

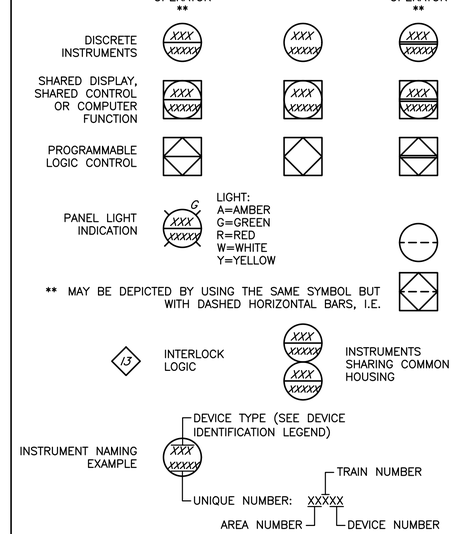

For Electrical & Process Work Only:

BRIAN S. CHONG 108528 LICENSED PROFESSIONAL ENGINEER STATE OF TEXAS

4-12-18

TOBY W. McCLEARY 93710 LICENSED PROFESSIONAL ENGINEER STATE OF TEXAS

4-12-2018

APPROVED: _____ P.E.C. DEVELOPMENT COORDINATOR

DATE: 5/21/18

NO.	DATE	REVISIONS	APP.
1	05/30/18	ISSUED FOR CONSTRUCTION	TWM

FORT BEND COUNTY M.U.D. No. 134E
FORT BEND COUNTY, TEXAS

JONES | CARTER
Texas Board of Professional Engineers Registration No. F-439
6330 West Loop South, Suite 150 • Bellaire, TX 77401 • 713.777.5337

HARVEST GREEN
WATER PLANT No. 1

GENERAL ABBREVIATIONS SHEET

NOTE: CITY SIGNATURES VALID FOR ONE YEAR ONLY AFTER DATE OF SIGNATURES

CITY OF HOUSTON
DEPARTMENT OF PUBLIC WORKS AND ENGINEERING

WATER	TRAFFIC & TRANSPORTATION
WASTEWATER	STORM WATER QUALITY
STORM	FACILITIES
STREET & BRIDGE	

FILE NO:
JOB NO: 13889-0002-00

DATE: April 2018
DGN. BY: KADOMINGUEZ
DWG. BY: JASTRUHAR

SCALE: NO SCALE

G4
SHEET No. 4 OF 47

FOR CITY OF HOUSTON USE ONLY
CITY DWG NO.

PUBLIC WORKS & ENGINEERING 60306 CITY OF HOUSTON, TEXAS

K:\13889\13889-0002-00 Water Plant No. 1\2 Design Phase\CAD\Plans\Archive\Conformed Dwgs\13889-0002 P&ID's\PID DWG\LEG.dwg May 30,2018 - 2:48pm jrb

C.O.H. LOG No. 18-0447

COH BLK REV. JAN 2006

ORIGINAL SCALE IN INCHES FOR REDUCED PLANS

CONFORMED DOCUMENTS

MISCELLANEOUS SYMBOLS

- TYPICAL NORMALLY CLOSED VALVE
- BALL VALVE
- BUTTERFLY VALVE
- SILENT CHECK VALVE
- SWING CHECK VALVE
- BALL CHECK VALVE
- DIAPHRAGM VALVE
- GATE VALVE
- DOUBLE DISC CHECK VALVE
- GLOBE VALVE
- PINCH VALVE
- NEEDLE VALVE
- THREE-WAY VALVE
- FLAP VALVE
- AIR & VACUUM VALVE
- AIR RELEASE VALVE
- DEGASSING VALVE
- SOLENOID VALVE
- PRESSURE RELIEF VALVE
- PRESSURE REDUCING VALVE
- PRESSURE SUSTAINING VALVE
- BACKPRESSURE VALVE
- AUTOMATIC SWITCHOVER VALVE
- VACUUM REGULATOR
- DRAIN LINE
- DRAIN INLET (SCREENED)
- DRAIN INLET (OPEN)
- VENT
- TUBING ADAPTER
- BLIND FLANGE
- UNION
- SLEEVE COUPLING
- FLANGED ADAPTER COUPLING
- DISMANTLING JOINT
- DOUBLE ARCH EXPANSION JOINT
- MALE CAM & GROOVE QUICK COUPLING
- DIAPHRAGM SEAL
- INLINE ANNULAR DIAPHRAGM
- SAMPLE COCK
- HOSE BIBB
- VACUUM BREAKER
- WYE STRAINER
- CORPORATION STOP
- GENERAL BACKFLOW PREVENTER
- BASKET STRAINER
- EMERGENCY EYE WASH & SHOWER
- MIXER
- STATIC MIXER
- SINGLE WALL STORAGE TANK
- DOUBLE WALL STORAGE TANK
- STORAGE CONTAINER
- AERATION TOWER
- EXHAUST FAN
- LOUVER
- GENERAL FAN
- GENERAL CRANE
- WINCH
- TRAVELING BRIDGE CRANE
- TROLLEY
- HOIST
- MANHOLE
- GENERAL BLOWER
- GENERAL PUMP
- AIR COMPRESSOR
- HEAT TRACING
- CALIBRATION TUBE/COLUMN
- GAS INDUCTION PUMP
- INJECTOR
- INJECTOR QUILL
- ROTAMETER
- ROTAMETER WITH INTEGRAL MANUAL VALVE
- PULSATION DAMPENER
- CHEMICAL DOSAGE CONTROLLER (SEE FLUID ABBREVIATIONS)
- COALESCING AIR FILTER

ELECTRICAL/ INSTRUMENTATION SYMBOLS

- 120 VAC ELECTRICAL SUPPLY
- LEVEL TRANSDUCER (SEE INSTRUMENTATION ABBREVIATIONS FOR TYPE)
- FLOAT WITH PVC COATED WEIGHT
- FLOW METER (SEE INSTRUMENTATION ABBREVIATIONS FOR TYPE)
- ONLINE ANALYZER (SEE ANALYZER ABBREVIATIONS FOR TYPE)
- PROBE ANALYZER (SEE ANALYZER ABBREVIATIONS FOR TYPE)
- LOAD CELL/SCALE
- SPACE HEATER
- MOTOR
- VARIABLE SPEED MOTOR
- MOTOR WITH LOCAL LOCKOUT (SEE INSTRUMENTATION ABBREVIATIONS FOR TYPE)
- ELECTRICAL SIGNAL
- DATA COMMUNICATION
- HEAT TRACING
- ANALOG INPUT
- ANALOG OUTPUT
- DISCRETE INPUT
- DISCRETE OUTPUT

GENERAL LEGEND

FUTURE	EXISTING	PROPOSED	
			PROPERTY LINE
			EASEMENT LINE
			BUILDING LINE
OHP	OHP	OHP	OVERHEAD POWER LINE
GAS	GAS	GAS	GAS LINE
			TYP PIPE FITTING (VERTICAL)
			TYP PIPE FITTING (HORIZ)
			TYPICAL PIPE VALVE
			CONCRETE PIPE SUPPORT
			MANHOLE
			UNDERGROUND PLANT PIPING
			ABOVEGROUND PLANT PIPING
	FP		EDGE OF EXISTING FLOODPLAIN
			EDGE OF BUFFERZONE
			EDGE OF PAVEMENT
			TOP OF BANK
			TOE OF SLOPE
			DRAINAGE SWALE
			CHAIN LINK FENCE
			WOODEN FENCE
			BARBED WIRE FENCE
			BRICK FENCE
100.0	100.0	125	NATURAL GROUND CONTOUR
			CONCRETE PAVEMENT
			CRUSHED CONCRETE PAVEMENT
			ASPHALT PAVEMENT
107.5	107.5	108.0	GRADE ELEVATION
			SLOPE TO DRAIN
		CJ	SAW-CUT CONTROL JOINT
		EJ	EXPANSION JOINT
		IJ	ISOLATION JOINT
		KJ	KEYED CONSTRUCTION JOINT
			SOIL BORING (SEE GEOTECHNICAL REPORT)
			EXISTING ITEM TO BE DEMOLISHED
			EXISTING ITEM TO BE ABANDONED

APPROVED: _____ F.B.C. DEVELOPMENT COORDINATOR

DATE: 5/21/18

NO.	DATE	REVISIONS	APP.
1	05/30/18	ISSUED FOR CONSTRUCTION	TWM

FORT BEND COUNTY M.U.D. No. 134E
FORT BEND COUNTY, TEXAS

JONES|CARTER
Texas Board of Professional Engineers Registration No. F-439
6330 West Loop South, Suite 150 • Bellaire, TX 77401 • 713.777.5337

HARVEST GREEN
WATER PLANT No. 1

GENERAL SYMBOLS SHEET

NOTE: CITY SIGNATURES VALID FOR ONE YEAR ONLY AFTER DATE OF SIGNATURES

CITY OF HOUSTON
DEPARTMENT OF PUBLIC WORKS AND ENGINEERING

WATER 5/14/18	TRAFFIC & TRANSPORTATION
WASTEWATER 5/14/18	STORM WATER QUALITY
STORM 5/14/18	FACILITIES 5/14/18
STREET & BRIDGE	

FILE NO:
JOB NO: 13889-0002-00
DATE: April 2018
DGN. BY: KADOMINGUEZ
DWG. BY: JASTRUHAR
SCALE: NO SCALE

FOR CITY OF HOUSTON USE ONLY
CITY DWG NO.
60306

For Electrical & Process Work Only:
STATE OF TEXAS — BRIAN S. CHONG — 108528 — LICENSED PROFESSIONAL ENGINEER
4-12-18

STATE OF TEXAS — TOBY W. McQUEARY — 93710 — LICENSED PROFESSIONAL ENGINEER
4-12-2018

G5
SHEET No. 5 OF 47

K:\13889\13889-0002-00 Water Plant No. 1\2 Design Phase\CAD\Plans\Archive\Conformed Dwgs\13889-0002 P&ID's\PID DWG\LEG.dwg May 30,2018 - 2:49pm jrb

C.O.H. LOG No. 18-0447

COH BLK REV. JAN 2006

CONFORMED DOCUMENTS

ORIGINAL SCALE IN INCHES FOR REDUCED PLANS

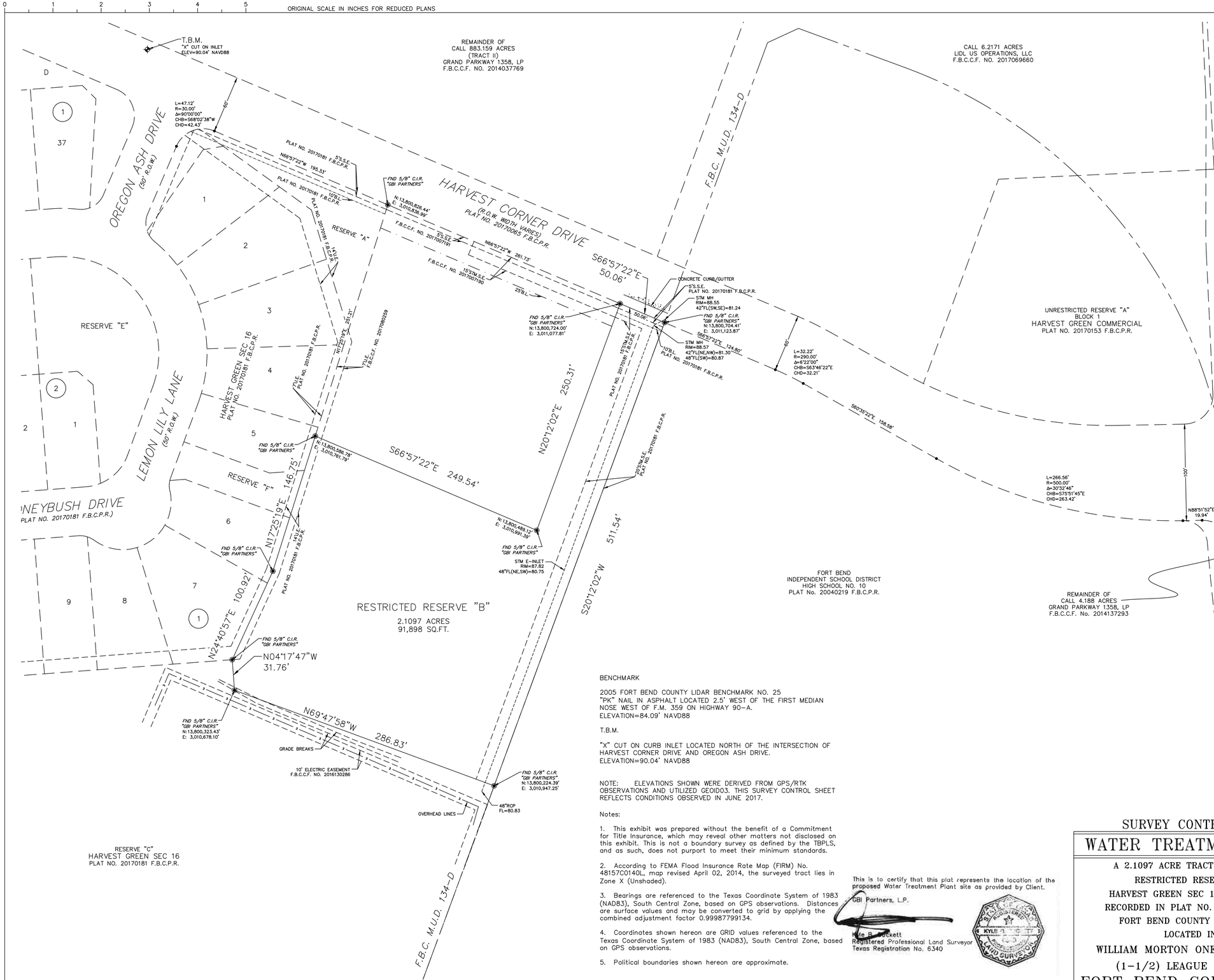

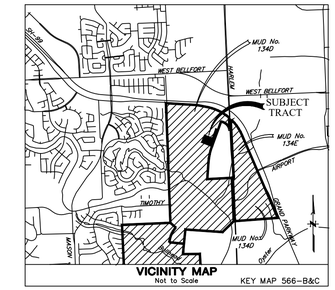

GRAPHIC SCALE

(IN US SURVEY FEET)
1 inch = 50 ft.

BENCHMARK

2005 FORT BEND COUNTY LIDAR BENCHMARK NO. 25
"PK" NAIL IN ASPHALT LOCATED 2.5' WEST OF THE FIRST MEDIAN NOSE WEST OF F.M. 359 ON HIGHWAY 90-A.
ELEVATION=84.09' NAVD88

T.B.M.

"X" CUT ON CURB INLET LOCATED NORTH OF THE INTERSECTION OF HARVEST CORNER DRIVE AND OREGON ASH DRIVE.
ELEVATION=90.04' NAVD88

NOTE: ELEVATIONS SHOWN WERE DERIVED FROM GPS/RTK OBSERVATIONS AND UTILIZED GEOID03. THIS SURVEY CONTROL SHEET REFLECTS CONDITIONS OBSERVED IN JUNE 2017.

Notes:

1. This exhibit was prepared without the benefit of a Commitment for Title Insurance, which may reveal other matters not disclosed on this exhibit. This is not a boundary survey as defined by the TBPLS, and as such, does not purport to meet their minimum standards.

2. According to FEMA Flood Insurance Rate Map (FIRM) No. 48157C0140L, map revised April 02, 2014, the surveyed tract lies in Zone X (Unshaded).

3. Bearings are referenced to the Texas Coordinate System of 1983 (NAD83), South Central Zone, based on GPS observations. Distances are surface values and may be converted to grid by applying the combined adjustment factor 0.99987799134.

4. Coordinates shown hereon are GRID values referenced to the Texas Coordinate System of 1983 (NAD83), South Central Zone, based on GPS observations.

5. Political boundaries shown hereon are approximate.

This is to certify that this plat represents the location of the proposed Water Treatment Plant site as provided by Client.

GBI Partners, L.P.

Kyle B. Puckett
Registered Professional Land Surveyor
Texas Registration No. 6340

STATE OF TEXAS REGISTERED KYLE B. PUCKETT 6340 LAND SURVEYOR

APPROVED: _____ W.C.C. DEVELOPMENT COORDINATOR

DATE: 5/21/18

SURVEY CONTROL SHEET

WATER TREATMENT PLANT

A 2.1097 ACRE TRACT OF LAND BEING
RESTRICTED RESERVE "B" OF
HARVEST GREEN SEC 16, A SUBDIVISION
RECORDED IN PLAT NO. 20170181 OF THE
FORT BEND COUNTY PLAT RECORDS.
LOCATED IN THE
WILLIAM MORTON ONE AND ONE-HALF
(1-1/2) LEAGUE GRANT, A-62
FORT BEND COUNTY, TEXAS

GBI PARTNERS, L.P.
LAND SURVEYING CONSULTANTS
13340 S. GESSNER RD. • MISSOURI CITY, TX 77489
PHONE: 281-499-4539 • www.gbisurvey.com
TBPLS FIRM # 10130300

SCALE: 1"= 50'	JOB NO. 111058	DATE: 01/23/2018
CREW CHIEF: GG	FIELD BOOK: 17066	DWG.: 111058 SCS

NO.	DATE	REVISIONS	APP.
1	05/30/18	ISSUED FOR CONSTRUCTION	TWM

FORT BEND COUNTY M.U.D. No. 134E
FORT BEND COUNTY, TEXAS

JONES | CARTER
Texas Board of Professional Engineers Registration No. F-439
6330 West Loop South, Suite 150 • Bellaire, TX 77401 • 713.777.5337

HARVEST GREEN
WATER PLANT No. 1

SURVEY CONTROL SHEET

NOTE: CITY SIGNATURES VALID FOR ONE YEAR ONLY AFTER DATE OF SIGNATURES

CITY OF HOUSTON
DEPARTMENT OF PUBLIC WORKS AND ENGINEERING

WATER 04/12/18	TRAFFIC & TRANSPORTATION
WASTEWATER 4/12/18	STORM WATER QUALITY
STORM 4/12/18	FACILITIES 04/12/18
STREET & BRIDGE	

FILE NO:
JOB NO: 13889-0002-00

DATE: April 2018
DGN. BY: MRKILLARY
DWG. BY: JASTRUHAR

SCALE: 1"=50'

FOR CITY OF HOUSTON USE ONLY
CITY DWG NO.
RECOMMENDED AND APPROVED PUBLIC WORKS AND ENGINEERING 60306 CITY DRAWING NUMBER HOUSTON, TEXAS

SHEET No. 6 OF 47

C1

C.O.H. LOG No. 18-0447

COH BLK REV. JAN 2006

K:\13889\13889-0002-00 Water Plant No. 1\2 Design Phase\CAD\Plans\Archive\Conformed Dwgs\111058_SCS.dwg May 30,2018 - 2:49pm jrb

ORIGINAL SCALE IN INCHES FOR REDUCED PLANS

CONFORMED DOCUMENTS

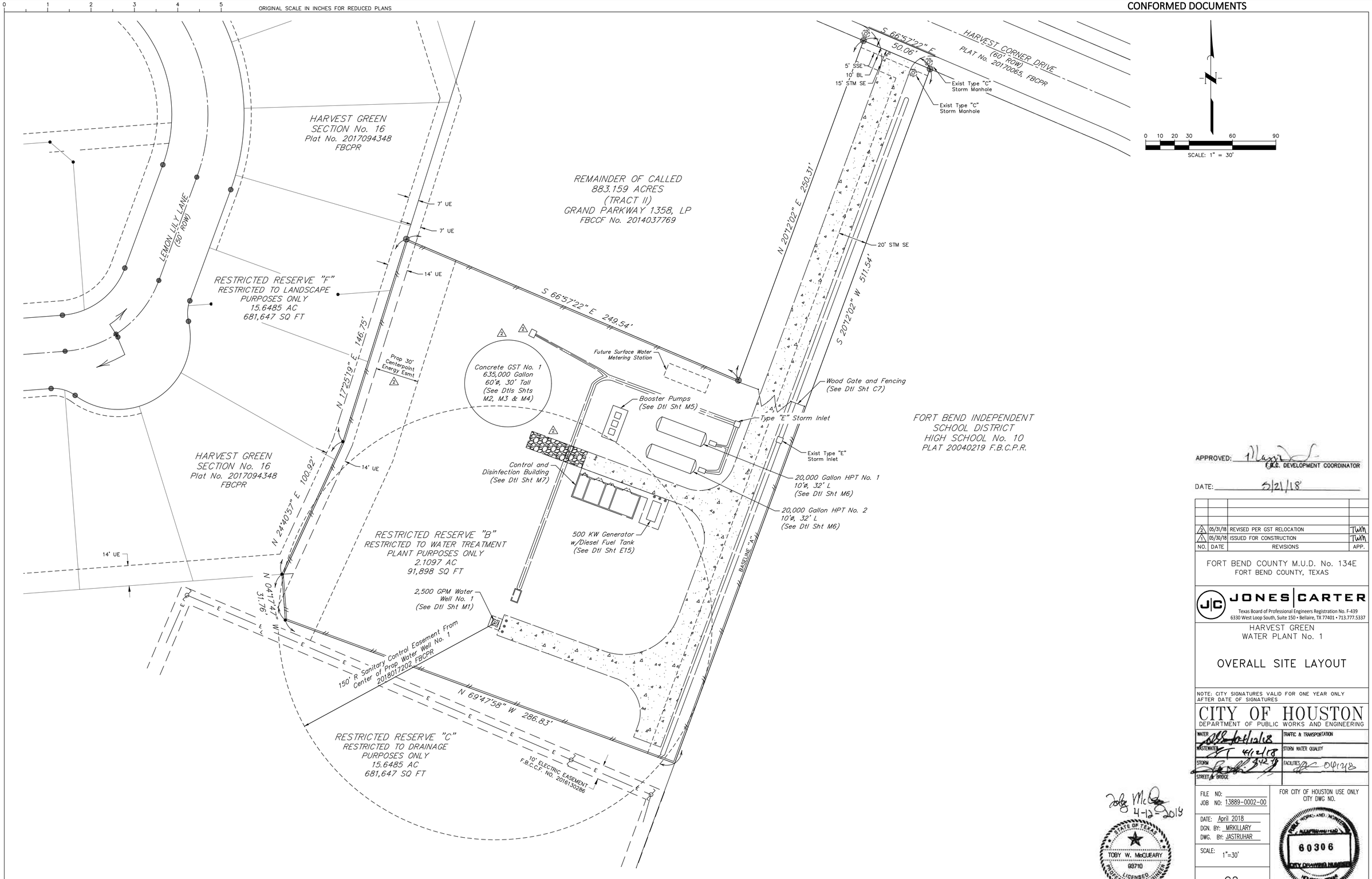

APPROVED: _____
F.B.C. DEVELOPMENT COORDINATOR

DATE: 5/21/18

NO.	DATE	REVISIONS	APP.
2	05/31/18	REVISED PER GST RELOCATION	TWM
1	05/30/18	ISSUED FOR CONSTRUCTION	TWM

FORT BEND COUNTY M.U.D. No. 134E
FORT BEND COUNTY, TEXAS

JONES | CARTER
Texas Board of Professional Engineers Registration No. F-439
6330 West Loop South, Suite 150 • Bellaire, TX 77401 • 713.777.5337

HARVEST GREEN
WATER PLANT No. 1

OVERALL SITE LAYOUT

NOTE: CITY SIGNATURES VALID FOR ONE YEAR ONLY AFTER DATE OF SIGNATURES

CITY OF HOUSTON
DEPARTMENT OF PUBLIC WORKS AND ENGINEERING

WATER	4/12/18	TRAFFIC & TRANSPORTATION	
WASTEWATER	4/12/18	STORM WATER QUALITY	
STORM	4/12/18	FACILITIES	04/12/18
STREET & BRIDGE			

FILE NO:
JOB NO: 13889-0002-00

DATE: April 2018
DGN. BY: MRKILLARY
DWG. BY: JASTRUHAR

SCALE: 1"=30'

C2
SHEET No. 7 OF 47

FOR CITY OF HOUSTON USE ONLY
CITY DWG NO.

PUBLIC WORKS AND ENGINEERING
60306
CITY DRAWING NUMBER
HOUSTON, TEXAS

STATE OF TEXAS
TOBY W. McCLUEARY
93710
LICENSED
PROFESSIONAL ENGINEER

Toby McCleary 4-12-2018

K:\13889\13889-0002-00 Water Plant No. 1\2 Design Phase\CAD\Plans\Archive\Conformed Dwgs\SITE.dwg May 31,2018 - 11:51am MRK

C.O.H. LOG No. 18-0447

COH BLK REV. JAN 2006

ORIGINAL SCALE IN INCHES FOR REDUCED PLANS

CONFORMED DOCUMENTS

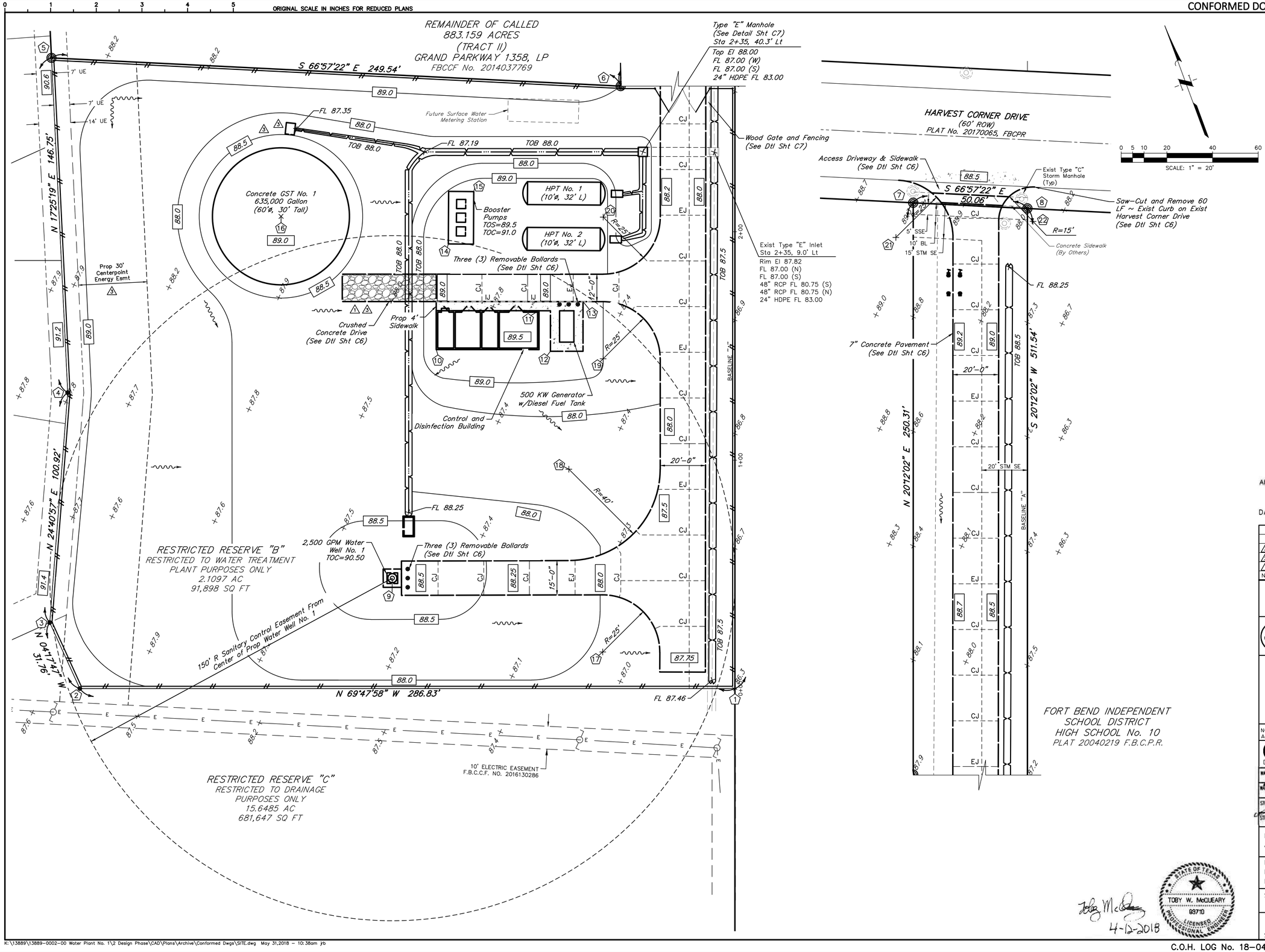

CJ — SAW-CUT CONTROL JOINT

EJ — EXPANSION JOINT

IJ — ISOLATION JOINT

PROPERTY BOUNDARIES STATION/OFFSETS:

NUMBER	STATION (FT)	OFFSET (FT)
1	0+00.00	0.19' Lt
2	0+00.00	286.83' Lt
3	0+28.91	300.00' Lt
4	1+29.51	292.11' Lt
5	2+76.09	299.23' Lt
6	2+63.17	50.00' Lt
7	5+14.02	50.04' Lt
8	5+11.54	0.06' Lt

PAVING/GRADING STATION/OFFSETS:

NUMBER	STATION (FT)	OFFSET (FT)
9	0+48.31	150.00' Lt
10	1+48.42	130.77' Lt
11	1+65.41	85.80' Lt
12	1+47.66	80.78' Lt
13	1+69.40	66.52' Lt
14	1+94.65	125.49' Lt
15	2+17.57	114.34' Lt
16	2+06.72	198.75' Lt
17	0+16.02	57.88' Lt
18	0+96.03	72.72' Lt
19	1+44.40	57.70' Lt
20	2+06.40	57.68' Lt
21	4+98.88	57.57' Lt
22	5+05.91	2.44' Rt

APPROVED: _____ F.B.C. DEVELOPMENT COORDINATOR

DATE: 5/21/18

NO.	DATE	REVISIONS	APP.
3	05/31/18	REVISED PER GST RELOCATION	TWM
2	05/30/18	ISSUED FOR CONSTRUCTION	TWM
1	04/20/18	REVISIONS PER ADDENDUM No. 2	TWM

FORT BEND COUNTY M.U.D. No. 134E
FORT BEND COUNTY, TEXAS

JONES | CARTER
Texas Board of Professional Engineers Registration No. F-439
6330 West Loop South, Suite 150 • Bellaire, TX 77401 • 713.777.5337

HARVEST GREEN
WATER PLANT No. 1

PAVING & GRADING

NOTE: CITY SIGNATURES VALID FOR ONE YEAR ONLY AFTER DATE OF SIGNATURES

CITY OF HOUSTON
DEPARTMENT OF PUBLIC WORKS AND ENGINEERING

WATER	04/12/18	TRAFFIC & TRANSPORTATION	
WASTEWATER	4/12/18	STORM WATER QUALITY	
STORM		FACILITIES	04/12/18
STREET & BRIDGE			

FILE NO:
JOB NO: 13889-0002-00

DATE: April 2018
DGN. BY: MRKILLARY
DWG. BY: JASTRUHAR

SCALE: 1"=20'

C3
SHEET No. 8 OF 47

FOR CITY OF HOUSTON USE ONLY
CITY DWG NO.
60306

TOBY W. McQUEARY
93710
LICENSED PROFESSIONAL ENGINEER
STATE OF TEXAS
4-12-2018

K:\13889\13889-0002-00 Water Plant No. 1\2 Design Phase\CAD\Plans\Archive\Conformed Dwgs\SITE.dwg May 31,2018 – 10:38am jrb

C.O.H. LOG No. 18-0447

COH BLK REV. JAN 2006

ORIGINAL SCALE IN INCHES FOR REDUCED PLANS

CONFORMED DOCUMENTS

PLANT PIPING TABLE

No.	DESCRIPTION
1	16"x90° Bend, MJ w/ Restraints
2	16"x90° Bend, MJ w/ Restraints
3	16"x90° Bend, MJ w/ Restraints
4	12"x90° Bend, MJ w/ Restraints
5	12"x45° Bend, MJ w/ Restraints
6	12"x45° Bend, MJ w/ Restraints
7	12"x90° Bend, MJ w/ Restraints
8	12"x90° Bend, MJ w/ Restraints
9	12"x90° Bend, MJ w/ Restraints
10	12"x12" Tee, MJ w/ Restraints
11	12"x12" Tee, MJ w/ Restraints
12	12" Gate Valve, MJ w/ Valve Box (GTV-04-002)
13	12"x12" Tee, MJ w/ Restraints
14	12"x12" Tee, MJ w/ Restraints
15	12"x90° Bend, MJ w/ Restraints
16	12" Gate Valve, MJ w/ Valve Box (GTV-04-001)
17	12" Gate Valve, MJ w/ Valve Box (GTV-04-101)
18	12" Gate Valve, MJ w/ Valve Box (GTV-04-201)
19	12" Gate Valve, MJ w/ Valve Box (GTV-04-003)
20	12" Gate Valve, MJ w/ Valve Box (GTV-04-102)
21	12"x12" Tee, MJ w/ Restraints
22	12" Gate Valve, MJ w/ Valve Box (GTV-04-202)
23	12"x12" Tee, MJ w/ Restraints
24	12"x90° Bend, MJ w/ Restraints
25	12"x90° Bend, MJ w/ Restraints

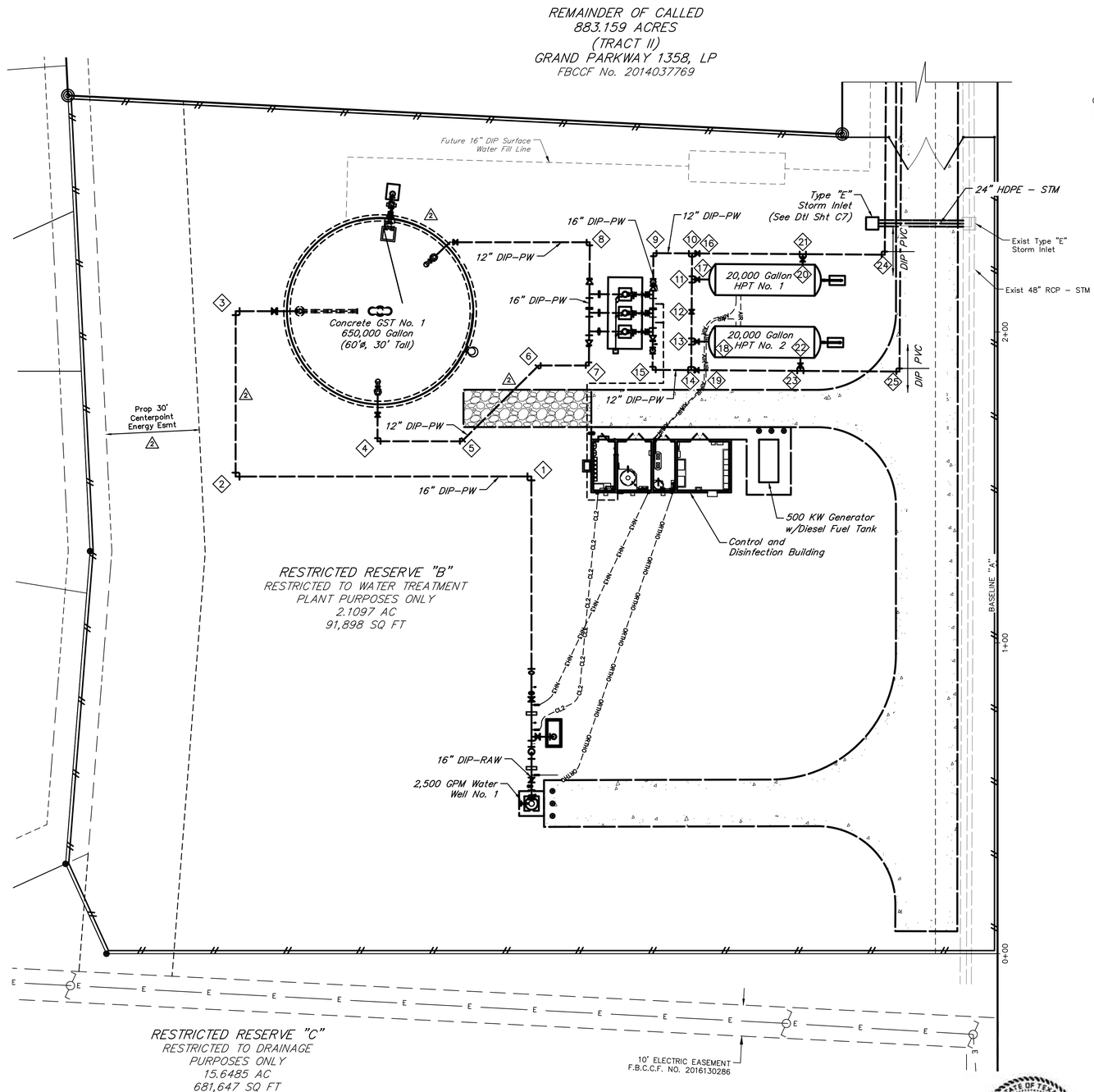

0 5 10 20 40 60
SCALE: 1" = 20'

PIPING NOTES:

1. All pipe to be ductile iron pipe (DIP) unless otherwise noted.
2. All chemical injection lines and taps shall be constructed as per the referenced detail drawings unless approved otherwise by the Engineer prior to making any changes.
3. Small diameter piping is shown schematically. Contractor shall field route piping, providing offsets, fittings, etc. as required. Support piping with stainless steel struts and hardware in building except for the chlorine room. FRP pipe supports shall be used in the chlorine room with stainless steel hardware.
4. All buried PVC shall have marker tape.

APPROVED: F.B.C. DEVELOPMENT COORDINATOR

DATE: 5/21/18

NO.	DATE	REVISIONS	APP.
2	05/31/18	REVISED PER GST RELOCATION	TWM
1	05/30/18	ISSUED FOR CONSTRUCTION	TWM

FORT BEND COUNTY M.U.D. No. 134E
FORT BEND COUNTY, TEXAS

JONES | CARTER
Texas Board of Professional Engineers Registration No. F-439
6330 West Loop South, Suite 150 • Bellaire, TX 77401 • 713.777.5337

HARVEST GREEN
WATER PLANT No. 1

ENLARGED PIPING PLAN
SHEET 1 OF 2

NOTE: CITY SIGNATURES VALID FOR ONE YEAR ONLY AFTER DATE OF SIGNATURES

CITY OF HOUSTON
DEPARTMENT OF PUBLIC WORKS AND ENGINEERING

WATER 4/12/18	TRAFFIC & TRANSPORTATION
WASTEWATER 4/12/18	STORM WATER QUALITY
STORM	FACILITIES 4/12/18
STREET & BRIDGE	

FILE NO:
JOB NO: 13889-0002-00

DATE: April 2018
DGN. BY: MRKILLARY
DWG. BY: JASTRUHAR

SCALE: 1"=20'

FOR CITY OF HOUSTON USE ONLY
CITY DWG NO.
PUBLIC WORKS AND ENGINEERING
60306
CITY DRAWING NUMBER
HOUSTON, TEXAS

STATE OF TEXAS
TOBY W. McCLEARY
83710
LICENSED PROFESSIONAL ENGINEER

Toby McCleary
4-12-2018

C4
SHEET No. 9 OF 47

K:\13889\13889-0002-00 Water Plant No. 1\2 Design Phase\CAD\Plans\Archive\Conformed Dwgs\SITE.dwg May 31,2018 - 9:48am jrb

C.O.H. LOG No. 18-0447

COH BLK REV. JAN 2006

ORIGINAL SCALE IN INCHES FOR REDUCED PLANS

CONFORMED DOCUMENTS

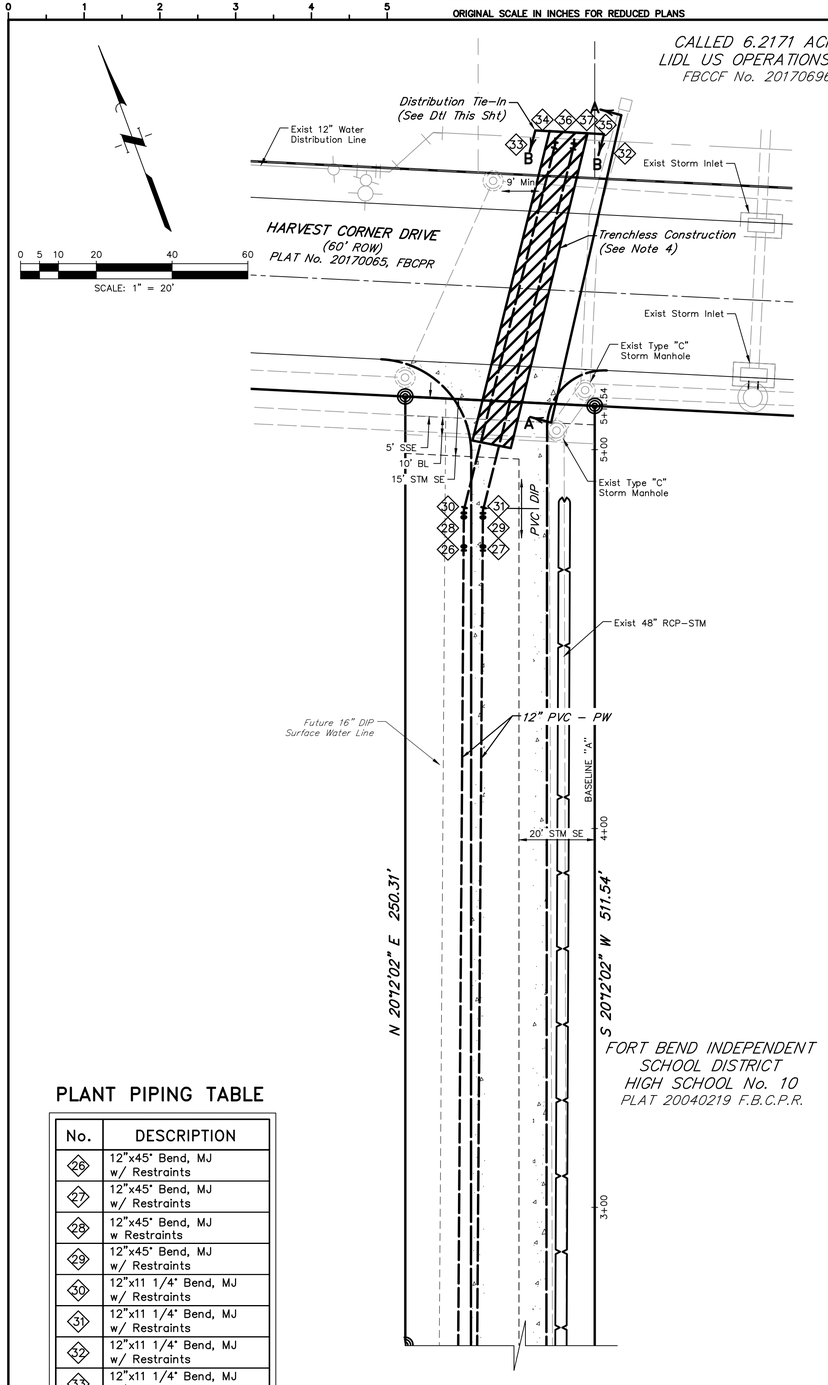

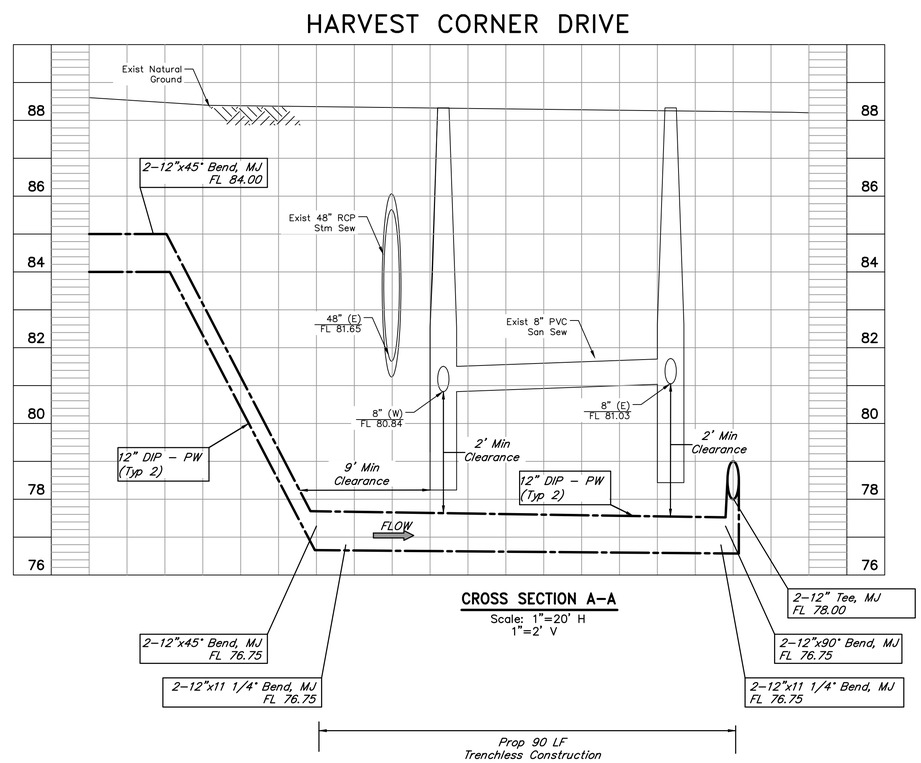

CROSS SECTION A-A
Scale: 1"=20' H
1"=2' V

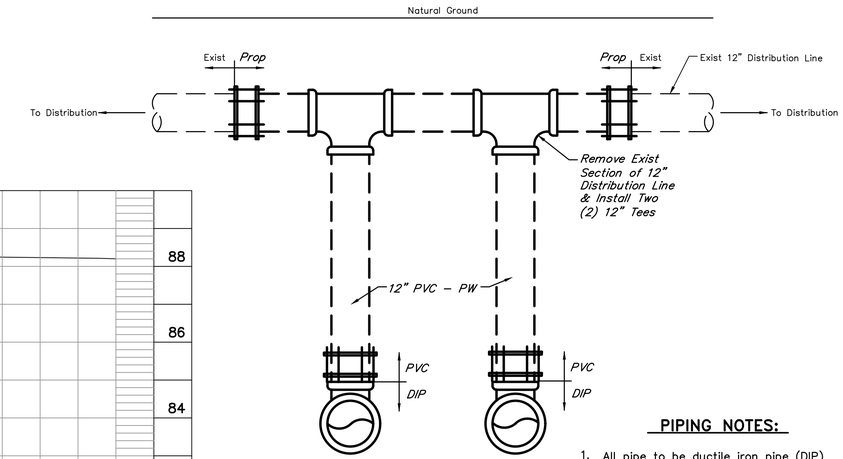

CROSS SECTION B-B
NOT TO SCALE

PIPING NOTES:

1. All pipe to be ductile iron pipe (DIP) unless otherwise noted.
2. Waterline pipe located beneath sewer pipe must be ductile iron pipe (DIP), pressure tested and leak tested according to AWWA C600 standards with a minimum pressure rating of 150 psi.
3. Waterline pipe must be located a minimum horizontal distance of nine (9) feet from sanitary manholes and maintain a minimum vertical clearance of two (2) feet from sanitary pipe.
4. All buried PVC pipe shall have marker tape.
5. △1 Waterline pipe shall be centered so that joints are not directly below crossing utility lines

PLANT PIPING TABLE

No.	DESCRIPTION
26	12"x45° Bend, MJ w/ Restraints
27	12"x45° Bend, MJ w/ Restraints
28	12"x45° Bend, MJ w Restraints
29	12"x45° Bend, MJ w/ Restraints
30	12"x11 1/4° Bend, MJ w/ Restraints
31	12"x11 1/4° Bend, MJ w/ Restraints
32	12"x11 1/4° Bend, MJ w/ Restraints
33	12"x11 1/4° Bend, MJ w/ Restraints
34	12"x90° Bend, MJ w/ Restraints
35	12"x90° Bend, MJ w/ Restraints
36	12"x12" Tee, MJ w/ Restraints
37	12"x12" Tee, MJ w/ Restraints

APPROVED: F.B.C. DEVELOPMENT COORDINATOR

DATE: 5/21/18

NO.	DATE	REVISIONS	APP.
2	05/30/18	ISSUED FOR CONSTRUCTION	TWM
1	04/20/18	REVISIONS PER ADDENDUM No. 2	TWM

FORT BEND COUNTY M.U.D. No. 134E
FORT BEND COUNTY, TEXAS

JONES | CARTER
Texas Board of Professional Engineers Registration No. F-439
6330 West Loop South, Suite 150 • Bellaire, TX 77401 • 713.777.5337

HARVEST GREEN
WATER PLANT No. 1

ENLARGED PIPING PLAN
SHEET 2 OF 2

NOTE: CITY SIGNATURES VALID FOR ONE YEAR ONLY AFTER DATE OF SIGNATURES

CITY OF HOUSTON
DEPARTMENT OF PUBLIC WORKS AND ENGINEERING

WATER	TRAFFIC & TRANSPORTATION
WASTEWATER 4/12/18	STORM WATER QUALITY
STORM	FACILITIES 4/12/18
STREET & BRIDGE	

FILE NO:
JOB NO: 13889-0002-00
DATE: April 2018
DGN. BY: MRKILLARY
DWG. BY: JASTRUHAR
SCALE: 1"=20'

FOR CITY OF HOUSTON USE ONLY
CITY DWG NO.
60306

C5
SHEET No. 10 OF 47

STATE OF TEXAS
TOBY W. McQUEARY
93710
LICENSED
PROFESSIONAL ENGINEER
4-12-2018

K:\13889\13889-0002-00 Water Plant No. 1\2 Design Phase\CAD\Plans\Archive\Conformed Dwgs\SITE.dwg May 30,2018 - 2:49pm jrb

C.O.H. LOG No. 18-0447

COH BLK REV. JAN 2006

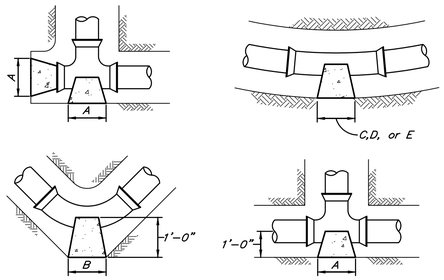

PIPE SIZE	"A" Plugs & Tees	"B" 90° Bend	"C" 45° Bend	"D" 22° 30' Bend	"E" 11° 15' Bend
4"	1'-0"	1'-0"	1'-0"	1'-0"	1'-0"
6"	1'-0"	1'-6"	1'-2"	1'-2"	1'-2"
8"	1'-3"	1'-9"	1'-6"	1'-6"	1'-3"
12"	2'-8"	3'-0"	2'-3"	2'-3"	2'-3"
16"	3'-6"	4'-3"	3'-0"	2'-6"	2'-6"

NOTES:

1. Heights of all blocks shall be equal to "A","B","C","D" or "E" dimension called for.
2. All concrete to be poured against firm, undisturbed soil.

MODIFIED COH F7: THRUST BLOCK DETAILS

NOT TO SCALE

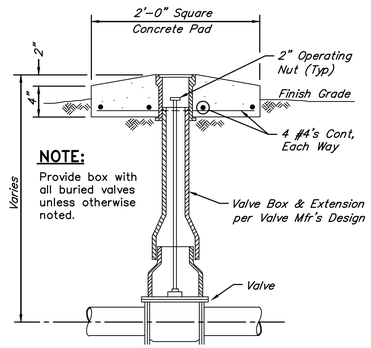

NOTE:
Provide box with all buried valves unless otherwise noted.

TYPICAL VALVE WITH BOX DETAIL

NOT TO SCALE

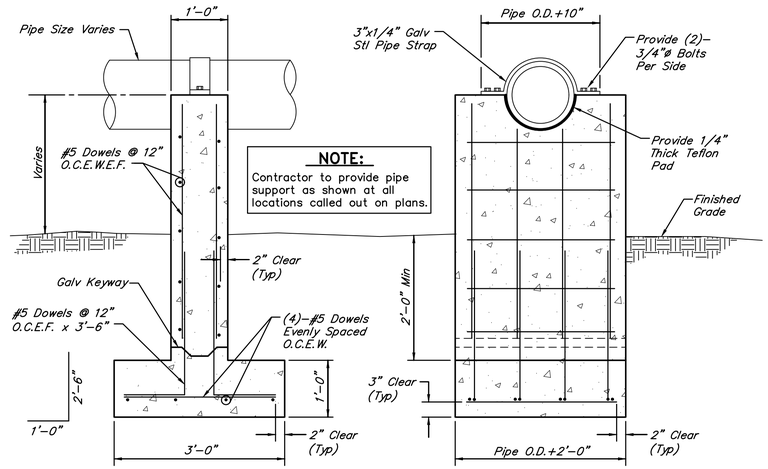

NOTE:
Contractor to provide pipe support as shown at all locations called out on plans.

CONCRETE PIPE SUPPORT DETAIL

NOT TO SCALE

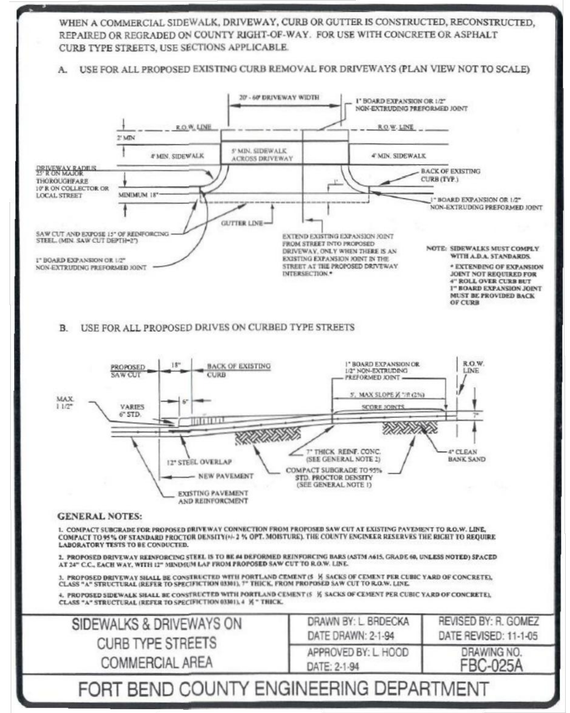

APPROVED: _____ F.B.C. DEVELOPMENT COORDINATOR

DATE: 5/21/18

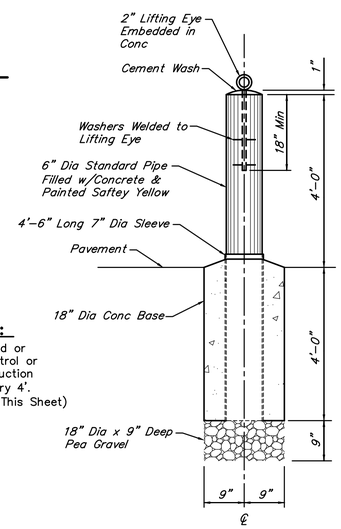

REMOVABLE BOLLARD DETAIL

NOT TO SCALE

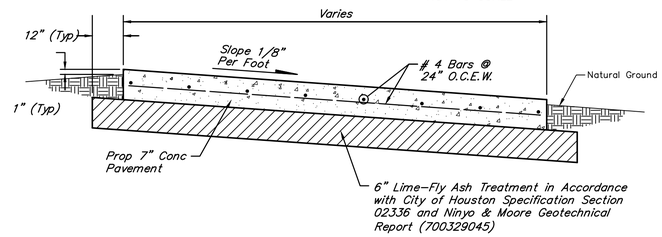

STANDARD CONCRETE DRIVEWAY DETAIL

NOT TO SCALE

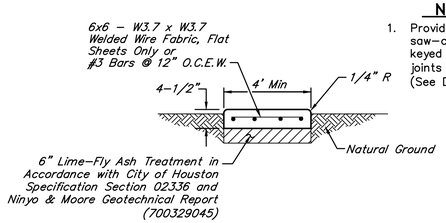

NOTES:

1. Provide tooled or saw-cut control or keyed construction joints at every 4'. (See Details This Sheet)

TYPICAL CONCRETE SIDEWALK

NOT TO SCALE

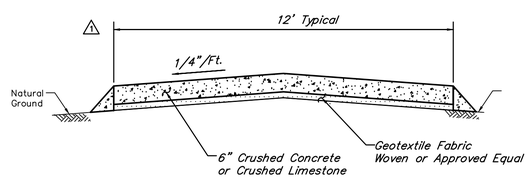

CRUSHED CONCRETE ROAD SECTION

NOT TO SCALE

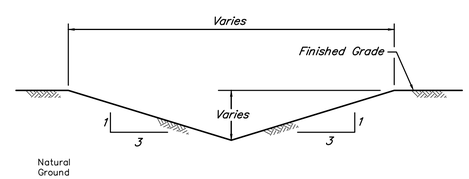

TYPICAL SWALE DETAIL

NOT TO SCALE

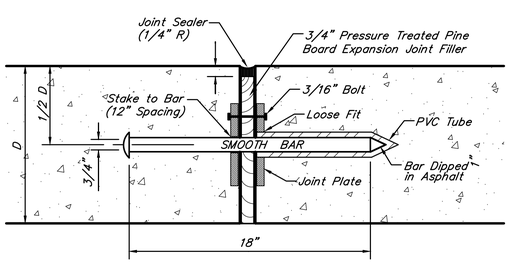

PAVEMENT EXPANSION JOINT

NOT TO SCALE

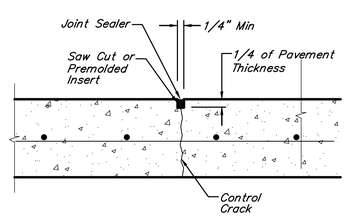

CONTROL JOINT (CJ)

NOT TO SCALE

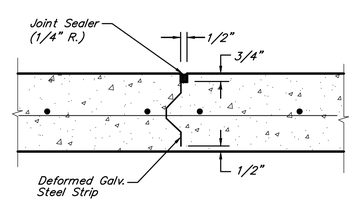

PAVEMENT CONSTRUCTION JOINT

NOT TO SCALE

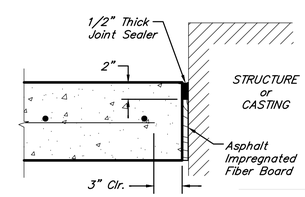

ISOLATION JOINT (IJ)

NOT TO SCALE

4-12-2018

STATE OF TEXAS
TOBY W. McCLEARY
83710
LICENSED
PROFESSIONAL ENGINEER

NO.	DATE	REVISIONS	APP.
2	05/30/18	ISSUED FOR CONSTRUCTION	TWM
1	04/20/18	REVISIONS PER ADDENDUM No. 2	TWM

FORT BEND COUNTY M.U.D. No. 134E
FORT BEND COUNTY, TEXAS

JONES | CARTER
Texas Board of Professional Engineers Registration No. F-439
6330 West Loop South, Suite 150 • Bellaire, TX 77401 • 713.777.5337

HARVEST GREEN
WATER PLANT No. 1

CIVIL DETAILS
SHEET 1 OF 2

NOTE: CITY SIGNATURES VALID FOR ONE YEAR ONLY AFTER DATE OF SIGNATURES

CITY OF HOUSTON
DEPARTMENT OF PUBLIC WORKS AND ENGINEERING

WATER	TRAFFIC & TRANSPORTATION
WASTEWATER 4/12/18	STORM WATER QUALITY
STORM	FACILITIES 04/12/18
STREET & BRIDGE	

FILE NO:
JOB NO: 13889-0002-00
DATE: April 2018
DGN. BY: MRKILLARY
DWG. BY: JASTRUHAR
SCALE: NO SCALE

C6
SHEET No. 11 OF 47

FOR CITY OF HOUSTON USE ONLY
CITY DWG NO.

PUBLIC WORKS AND ENGINEERING
APPROVED/ACCEPTED
60306
CITY DRAWING NUMBER
HOUSTON, TEXAS

ORIGINAL SCALE IN INCHES FOR REDUCED PLANS

CONFORMED DOCUMENTS

NOTE:

Dimensions are approximate, adjust slab as required per actual supplied equipment

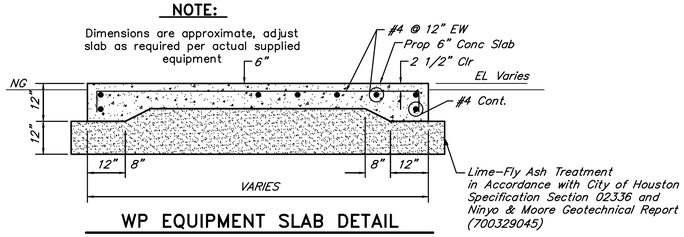

WP EQUIPMENT SLAB DETAIL

NOT TO SCALE

SLAB	DIMENSIONS
PRESSURE ENCLOSURE	3'-0" x 2'-0"

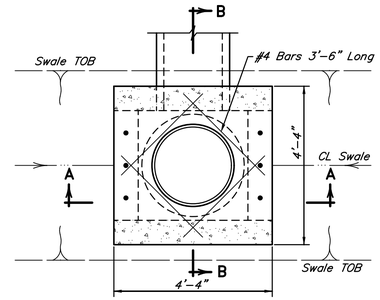

PLAN VIEW

2 Opening

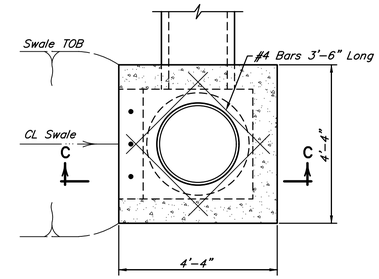

PLAN VIEW

1 Opening

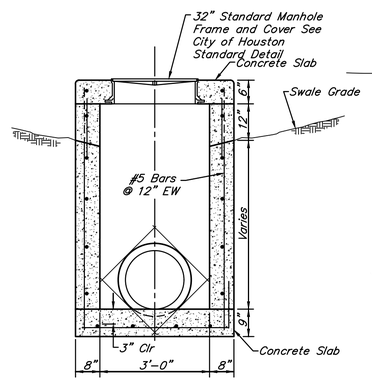

SECTION "A-A"

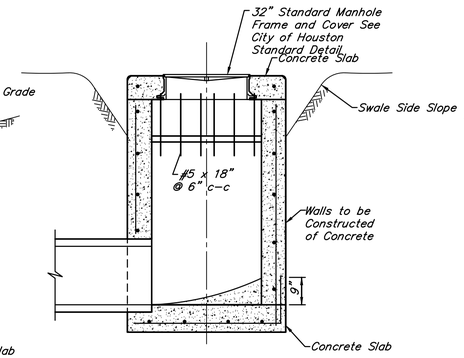

SECTION "B-B"

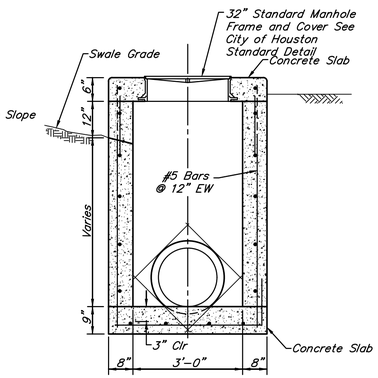

SECTION "C-C"

"E" INLET DETAIL

NOT TO SCALE

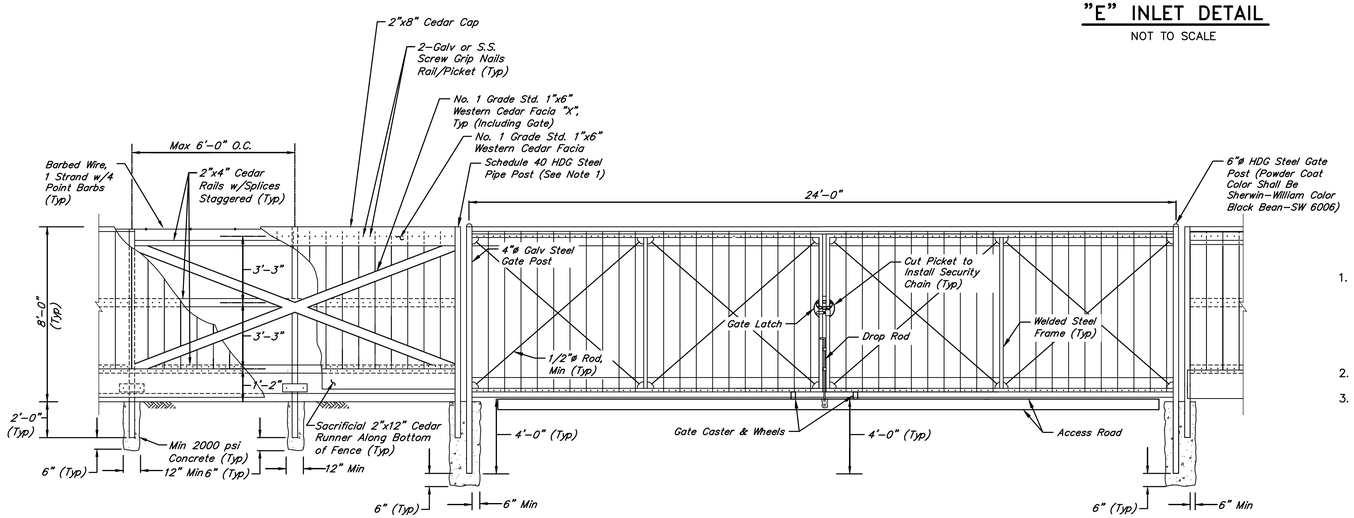

WOOD FENCE & SWING GATE DETAIL

NOT TO SCALE

FENCE & GATES NOTES:

1. All metal fence posts and gate posts along Harvest Corner Drive to be schedule 40 hot dipped galvanized steel pipe (Powder coat color shall be Sherwin-William color Black Bean- SW 6006). Intermediate posts shall be 2 1/2" in diameter. Corner posts shall be 3" diameter. Walking gate posts shall be 4" in diameter. Entrance gate posts shall be 6" in diameter.
2. Hardware used to attach fence pickets to gate shall be galvanized steel.
3. 1 Strand of Barbed wire with 4 point barbs to be located inside and parallel to the top of the fence.

Toby McQueary 4-12-2018

STATE OF TEXAS — TOBY W. McQUEARY — 93710 — LICENSED PROFESSIONAL ENGINEER

APPROVED: F.B.C. DEVELOPMENT COORDINATOR

DATE: 5/21/18

NO.	DATE	REVISIONS	APP.
1	05/30/18	ISSUED FOR CONSTRUCTION	TWM

FORT BEND COUNTY M.U.D. No. 134E
FORT BEND COUNTY, TEXAS

JONES|CARTER
Texas Board of Professional Engineers Registration No. F-439
6330 West Loop South, Suite 150 • Bellaire, TX 77401 • 713.777.5337

HARVEST GREEN
WATER PLANT No. 1

CIVIL DETAILS
SHEET 2 OF 2

NOTE: CITY SIGNATURES VALID FOR ONE YEAR ONLY AFTER DATE OF SIGNATURES

CITY OF HOUSTON
DEPARTMENT OF PUBLIC WORKS AND ENGINEERING

WATER	TRAFFIC & TRANSPORTATION
WASTEWATER 4/12/18	STORM WATER QUALITY
STORM 4/12/18	FACILITIES 4-12-2018
STREET & BRIDGE	

FILE NO:
JOB NO: 13889-0002-00

DATE: April 2018
DGN. BY: MRKILLARY
DWG. BY: JASTRUHAR

SCALE: NO SCALE

C7
SHEET No. 12 OF 47

FOR CITY OF HOUSTON USE ONLY
CITY DWG NO.

PUBLIC WORKS AND ENGINEERING — 60306 — CITY DRAWING NUMBER — HOUSTON, TEXAS

K:\13889\13889-0002-00 Water Plant No. 1\2 Design Phase\CAD\Plans\Archive\Conformed Dwgs\MISCD.dwg May 30,2018 - 2:50pm jrb

C.O.H. LOG No. 18-0447

COH BLK REV. JAN 2006

ORIGINAL SCALE IN INCHES FOR REDUCED PLANS

CONFORMED DOCUMENTS

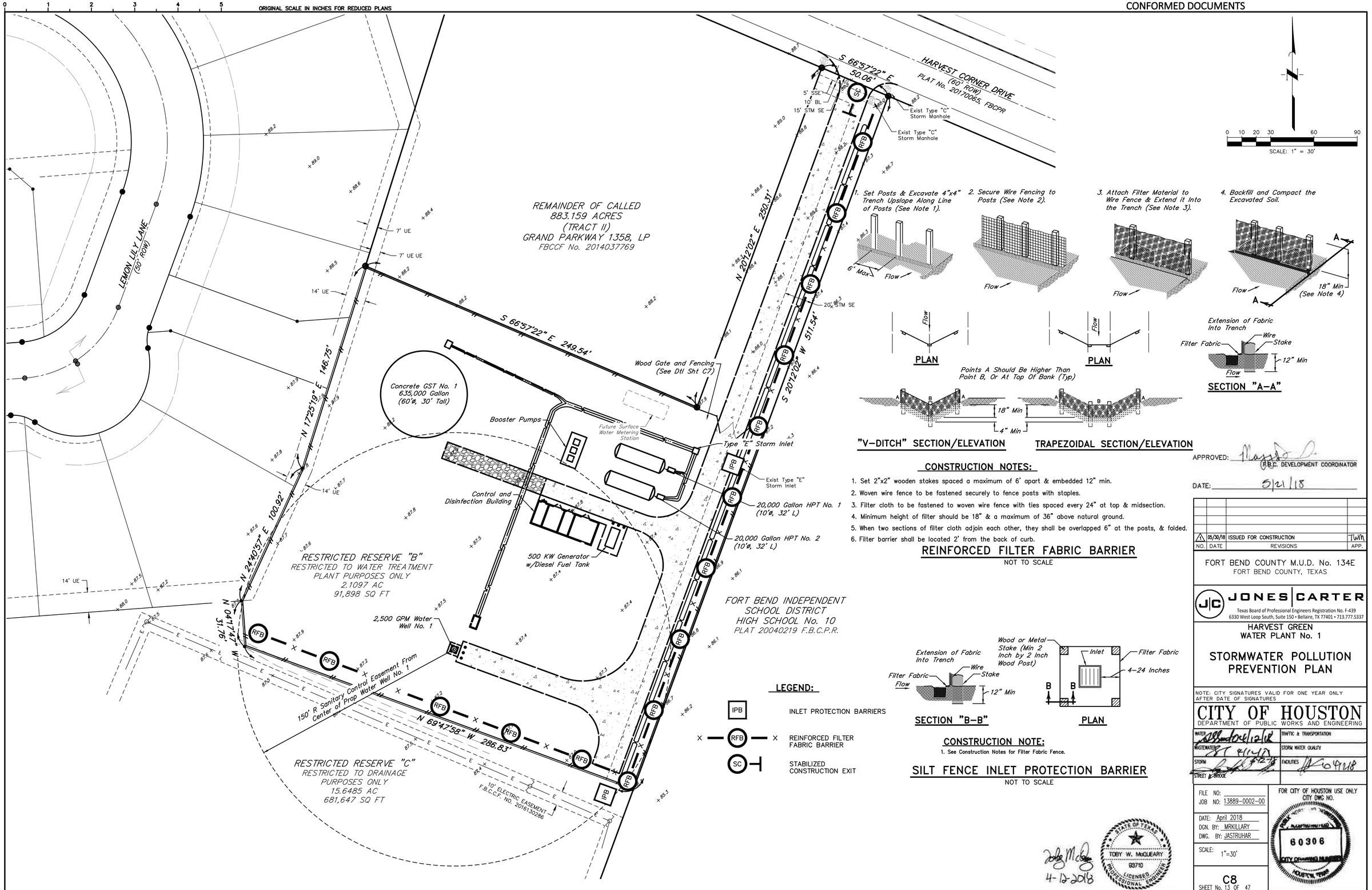

CONSTRUCTION NOTES:

1. Set 2"x2" wooden stakes spaced a maximum of 6' apart & embedded 12" min.
2. Woven wire fence to be fastened securely to fence posts with staples.
3. Filter cloth to be fastened to woven wire fence with ties spaced every 24" at top & midsection.
4. Minimum height of filter should be 18" & a maximum of 36" above natural ground.
5. When two sections of filter cloth adjoin each other, they shall be overlapped 6" at the posts, & folded.
6. Filter barrier shall be located 2' from the back of curb.

REINFORCED FILTER FABRIC BARRIER

NOT TO SCALE

CONSTRUCTION NOTE:

1. See Construction Notes for Filter Fabric Fence.

SILT FENCE INLET PROTECTION BARRIER

NOT TO SCALE

LEGEND:

- IPB — INLET PROTECTION BARRIERS
- X — RFB — X REINFORCED FILTER FABRIC BARRIER
- SC — STABILIZED CONSTRUCTION EXIT

APPROVED: _____ H.B.C. DEVELOPMENT COORDINATOR

DATE: 5/21/18

NO.	DATE	REVISIONS	APP.
1	05/30/18	ISSUED FOR CONSTRUCTION	TWM

FORT BEND COUNTY M.U.D. No. 134E
FORT BEND COUNTY, TEXAS

JONES | CARTER
Texas Board of Professional Engineers Registration No. F-439
6330 West Loop South, Suite 150 • Bellaire, TX 77401 • 713.777.5337

HARVEST GREEN
WATER PLANT No. 1

STORMWATER POLLUTION PREVENTION PLAN

NOTE: CITY SIGNATURES VALID FOR ONE YEAR ONLY AFTER DATE OF SIGNATURES

CITY OF HOUSTON
DEPARTMENT OF PUBLIC WORKS AND ENGINEERING

WATER	TRAFFIC & TRANSPORTATION
WASTEWATER	STORM WATER QUALITY
STORM	FACILITIES
STREET & BRIDGE	

FILE NO:
JOB NO: 13889-0002-00

DATE: April 2018
DGN. BY: MRKILLARY
DWG. BY: JASTRUHAR
SCALE: 1"=30'

C8
SHEET No. 13 OF 47

FOR CITY OF HOUSTON USE ONLY
CITY DWG NO.
PLAN APPROVED
60306
CITY DRAWING NUMBER
HOUSTON, TEXAS

STATE OF TEXAS
TOBY W. McCLEARY
93710
LICENSED PROFESSIONAL ENGINEER

4-12-2018

K:\13889\13889-0002-00 Water Plant No. 1\2 Design Phase\CAD\Plans\Archive\Conformed Dwgs\SITE.dwg May 30,2018 – 2:50pm jrb

C.O.H. LOG No. 18–0447

COH BLK REV. JAN 2006

ORIGINAL SCALE IN INCHES FOR REDUCED PLANS

CONFORMED DOCUMENTS

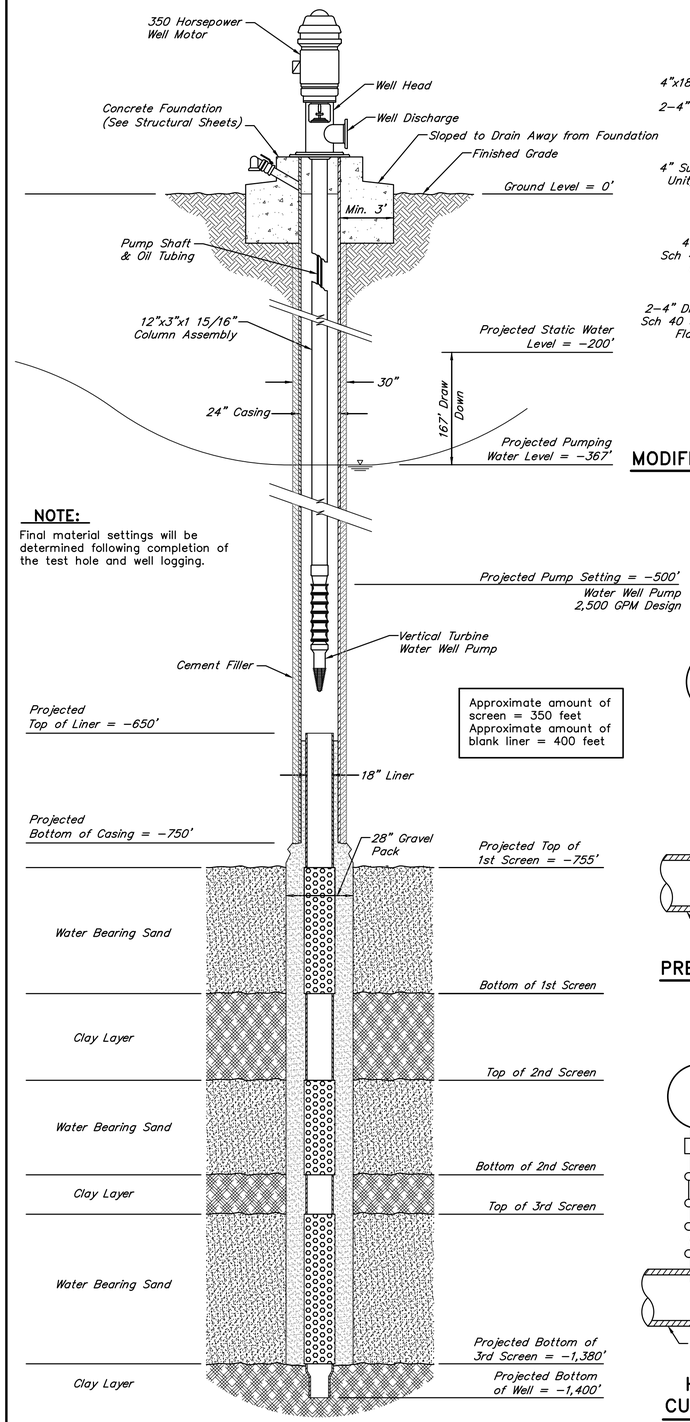

NOTE:

Final material settings will be determined following completion of the test hole and well logging.

Approximate amount of screen = 350 feet
Approximate amount of blank liner = 400 feet

WATER WELL PROFILE

NOT TO SCALE

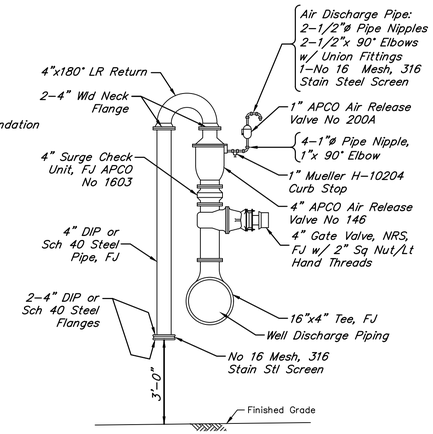

MODIFIED COH F5 – AIR RELEASE VALVE

NOT TO SCALE

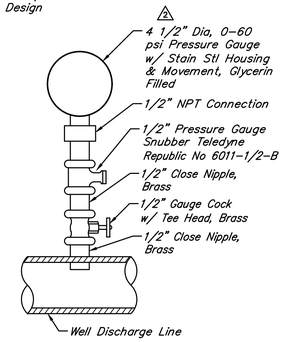

PRESSURE GAUGE DETAIL

NOT TO SCALE

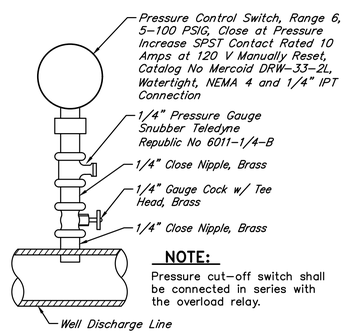

NOTE:

Pressure cut-off switch shall be connected in series with the overload relay.

HIGH PRESSURE SAFETY CUT-OFF SWITCH ASSEMBLY

NOT TO SCALE

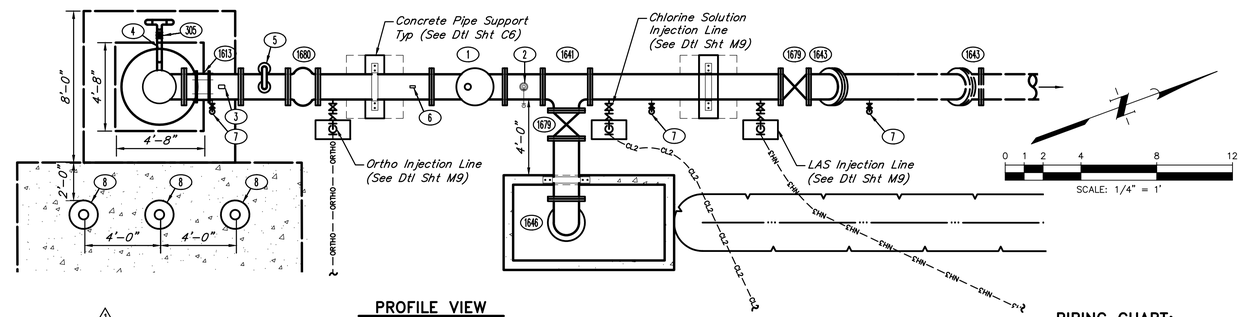

PROFILE VIEW

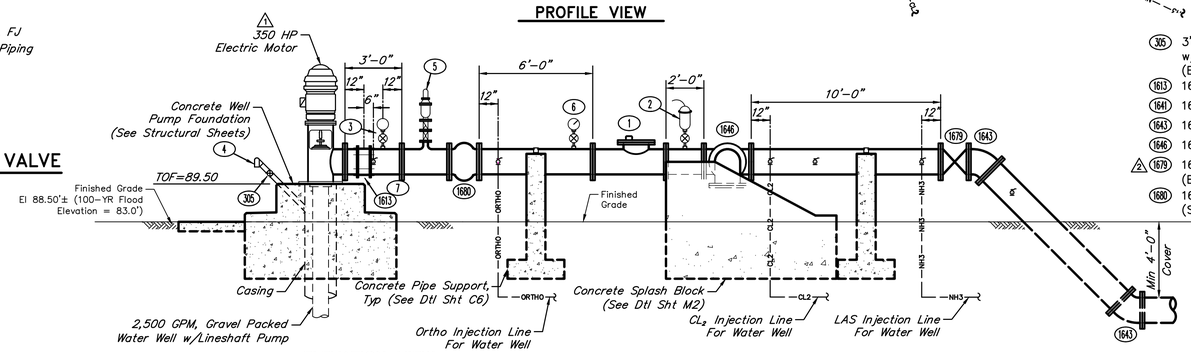

ELEVATION VIEW

WATER WELL PIPING DETAILS

SCALE: 1/4" = 1'-0"

PIPING CHART:

- 305 — 3" Locking Butterfly Valve, Threaded, w/ 1/4 Turn to Open or Close (BFV-01-001)
- 1613 — 16" Dresser Coupling, Style 38
- 1641 — 16"x16" Tee, FJ
- 1643 — 16"x45° Bend, FJ
- 1646 — 16"x90° Bend, FJ
- 1679 — 16" Butterfly Valve, FJ (BFV-01-001 & BFV-01-002)
- 1680 — 16" Silent Globe Check Valve, FJ (SCK-01-001)

WATER WELL ACCESSORY CHART:

1. 16" Sparling Series 102 Direct Drive Flowmeter, FJ, Totalizer-Transmitter 4-20mA, w/ Cover or Approved Equal (FM-01-001)
2. 1" Air Release Valve, APCO Model No 200A, w/ No 16 Mesh, 316 Stain Steel Screen on Discharge Turned Down and Shut-Off Ball Valve (ARV-01-003 & BV-01-004)
3. High Pressure Safety Cut-Off Switch (PSH 01001) (See Detail on This Sheet)
4. 3" Vent Pipe Casing w/ Threaded Tee and Two (2) "L"s Opening Downward, Covered w/ No 16 Mesh, 316 Stain Steel Screen
5. 4" Air Release Valve Assembly (ARV-01-001, ARV-01-002, BV-01-002 & SGC-01-001) (See Detail on This Sheet)
6. Pressure Gauge (0-60 psi) (PI 01002) (See Detail on This Sheet)
7. 3/4" Sample Cock (SC-01-001 to SC-01-003) (See Detail Sheet M8)
8. Removable 8" Pipe Bollard, Typical 3 Shown (See Detail on Sheet C6)

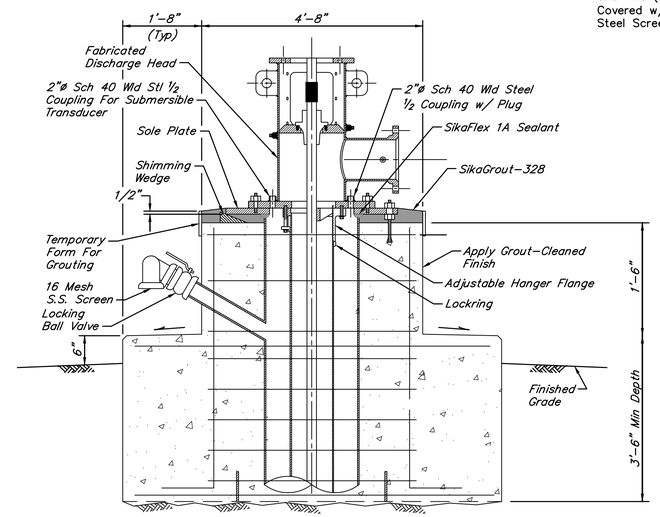

INSTALLATION NOTES:

1. Sand blast or bush hammer the top of the foundation to remove all laitance.
2. Remove all debris and dust prior to grouting.
3. Saturate the concrete with water but without pools.
4. Shim and level the sole plate to within 0.002" across any two points on the surface.
5. The top of the temporary grout forms must be 1/2" above the bottom of the sole plate.
6. Apply Sika-flex prior to grouting. Leave two witness gaps in the sealant to observe grout run-out.
7. Do not grout until the FPR has inspected the forms and sealant.
8. Mix grout according to manufacturer's directions.
9. Vibrate the grout under the sole plate without affecting shims or level.
10. Recheck level prior to grout set-up.
11. Allow three (3) days to cure before installing discharge head.

HF-TYPE FABRICATED DISCHARGE HEAD FOUNDATION AND INSTALLATION DETAIL

NOT TO SCALE

STATE OF TEXAS — TOBY W. McCLEARY 68710 — LICENSED PROFESSIONAL ENGINEER

4-12-2018

APPROVED: _____ (F.B.C. DEVELOPMENT COORDINATOR)

DATE: 5/21/18

NO.	DATE	REVISIONS	APP.
3	05/30/18	ISSUED FOR CONSTRUCTION	TWM
2	04/20/18	REVISIONS PER ADDENDUM No. 2	TWM
1	04/13/18	REVISIONS PER ADDENDUM No. 1	TWM

FORT BEND COUNTY M.U.D. No. 134E
FORT BEND COUNTY, TEXAS

JONES | CARTER
Texas Board of Professional Engineers Registration No. F-439
6330 West Loop South, Suite 150 • Bellaire, TX 77401 • 713.777.5337

HARVEST GREEN WATER PLANT No. 1

WATER WELL PROFILE & PIPING

NOTE: CITY SIGNATURES VALID FOR ONE YEAR ONLY AFTER DATE OF SIGNATURES

CITY OF HOUSTON
DEPARTMENT OF PUBLIC WORKS AND ENGINEERING

WATER / WASTEWATER	TRAFFIC & TRANSPORTATION
STORM	STORM WATER QUALITY
STREET & BRIDGE	FACILITIES

FILE NO:
JOB NO: 13889-0002-00

DATE: April 2018
DGN. BY: MRKILLARY
DWG. BY: JASTRUHAR

SCALE: NO SCALE

M1
SHEET No. 14 OF 47

FOR CITY OF HOUSTON USE ONLY
CITY DWG NO.

ACCEPTED AND FILED — PUBLIC WORKS AND ENGINEERING — 60306 — CITY DRAWING NUMBER — HOUSTON, TEXAS

K:\13889\13889-0002-00 Water Plant No. 1\2 Design Phase\CAD\Plans\Archive\Conformed Dwgs\SITE.dwg May 30,2018 – 2:50pm jrb

C.O.H. LOG No. 18-0447

COH BLK REV. JAN 2006

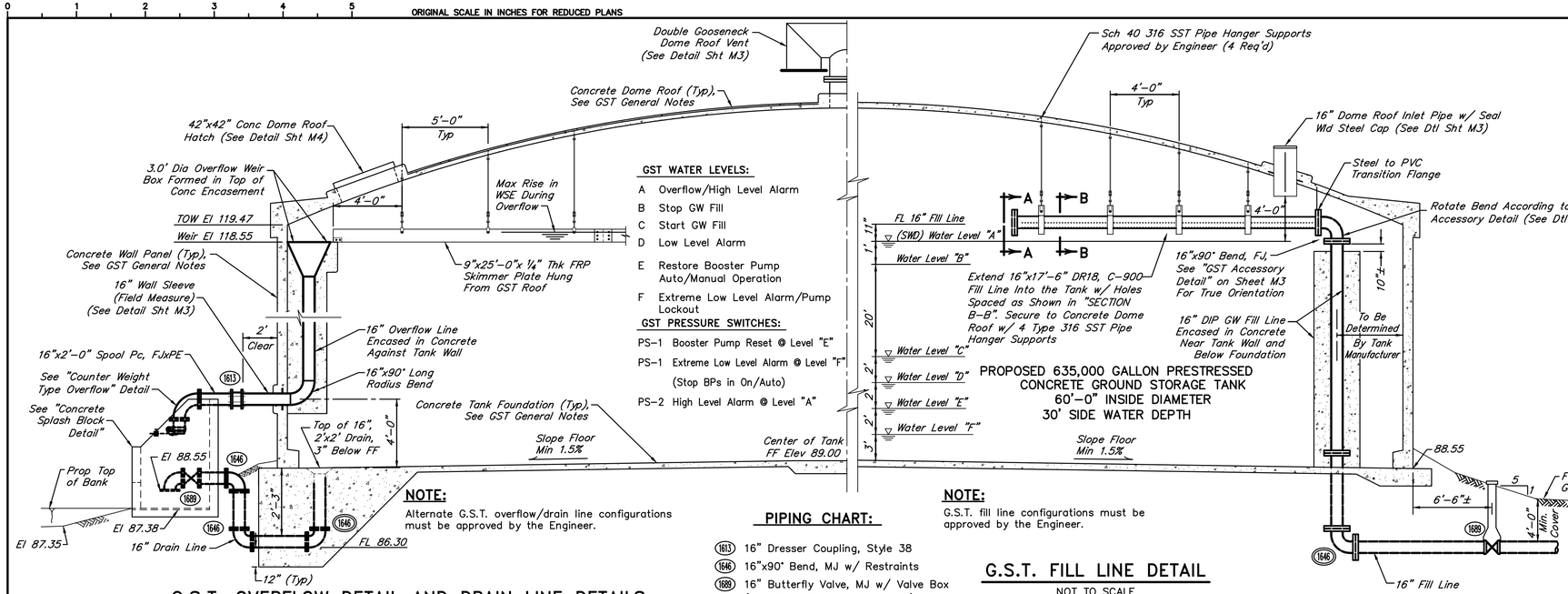

GST WATER LEVELS:

- A Overflow/High Level Alarm
- B Stop GW Fill
- C Start GW Fill
- D Low Level Alarm
- E Restore Booster Pump Auto/Manual Operation
- F Extreme Low Level Alarm/Pump Lockout

GST PRESSURE SWITCHES:

- PS-1 Booster Pump Reset @ Level "E"
- PS-1 Extreme Low Level Alarm @ Level "F" (Stop BPs in On/Auto)
- PS-2 High Level Alarm @ Level "A"

NOTE:
Alternate G.S.T. overflow/drain line configurations must be approved by the Engineer.

PIPING CHART:

- (1613) 16" Dresser Coupling, Style 38
- (1646) 16"x90° Bend, MJ w/ Restraints
- (1688) 16" Butterfly Valve, MJ w/ Valve Box (BFV-02-001 & BFV-02-002)

NOTE:
G.S.T. fill line configurations must be approved by the Engineer.

G.S.T. OVERFLOW DETAIL AND DRAIN LINE DETAILS

NOT TO SCALE

G.S.T. FILL LINE DETAIL

NOT TO SCALE

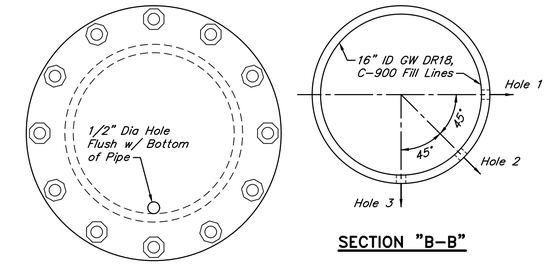

SECTION "A-A"

SECTION "B-B"

GST GW FILL LINE SECTIONS

NOT TO SCALE

PVC FILL LINE NOTES:

1. Drill holes 1, 2 and 3 along the 17'-6" length of the fill lines to swirl the water COUNTER-CLOCKWISE in the GST.
2. All drilled holes for 12" ID PVC pipe shall be 11/16" dia at 2" centerline -to-centerline spacing along the fill line. Remove all drill cuttings before installation.

NOTE:
Weight of the counter weight shall be equal to the weight of the flap. There shall not be a gap below the flap valve and opening.

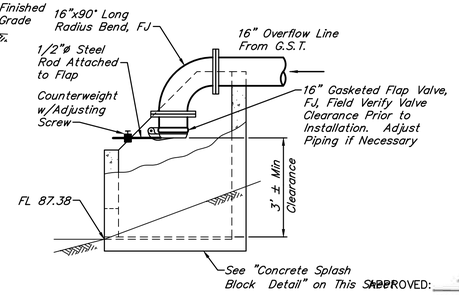

COUNTER WEIGHT TYPE OVERFLOW

NOT TO SCALE

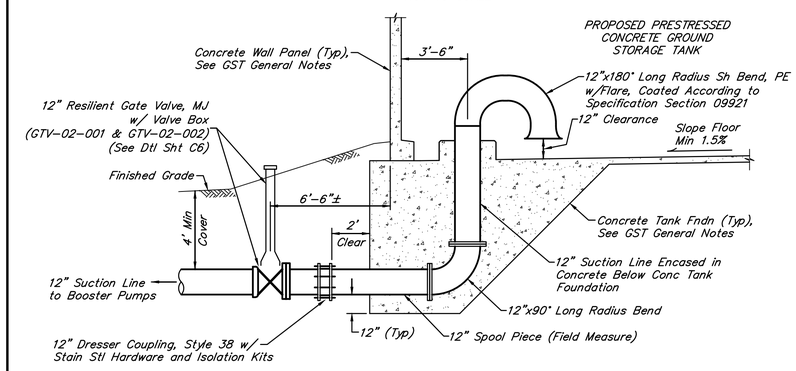

G.S.T. SUCTION/INTERCONNECT LINE DETAIL

NOT TO SCALE

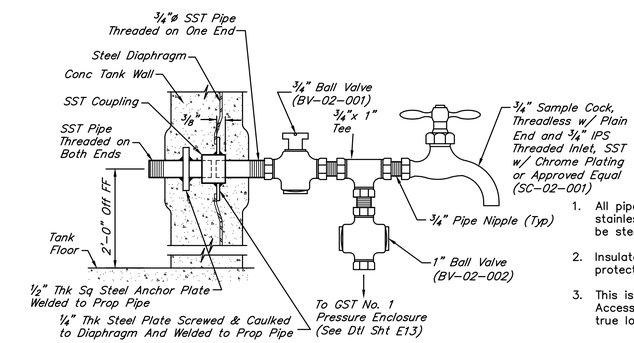

NOTES:

1. All pipe and fittings shall be 304 stainless steel. Anchor plates shall be steel ASTM A36.
2. Insulate entire assembly for freeze protection.
3. This is only a typical detail. See GST Accessory Detail on this sheet for true location & orientation.

MODIFIED COH F3: SAMPLE TAP DETAIL

NOT TO SCALE

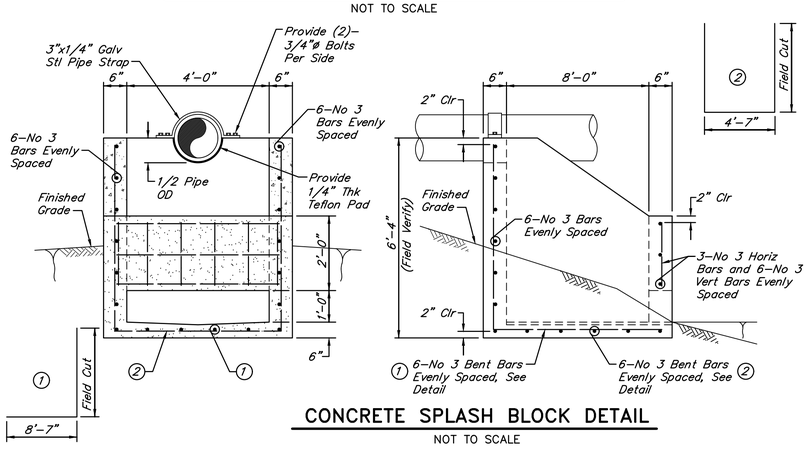

CONCRETE SPLASH BLOCK DETAIL

NOT TO SCALE

GUARD RAIL NOTES:

1. Provide 6"x6"x1/4" neoprene pad between base plate and concrete surface.
2. Handrail to be rolled to curvature of tank and set 1-3/4" back from edge.
3. All open pipe ends to be watertight sealed with Engineer approved caps.
4. Material shall be 6061-T6 Aluminum.

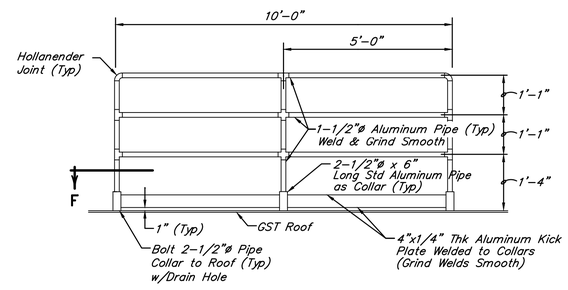

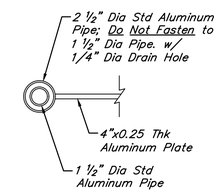

SECTION "F-F"

MODIFIED COH F13: GUARD RAIL DETAIL

NOT TO SCALE

APPROVED: _____ E.A.C. DEVELOPMENT COORDINATOR

DATE: 5/21/18

NO.	DATE	REVISIONS	APP.
1	05/30/18	ISSUED FOR CONSTRUCTION	TWM

FORT BEND COUNTY M.U.D. No. 134E
FORT BEND COUNTY, TEXAS

JONES | CARTER
Texas Board of Professional Engineers Registration No. F-439
6330 West Loop South, Suite 150 • Bellaire, TX 77401 • 713.777.5337

HARVEST GREEN
WATER PLANT No. 1

GROUND STORAGE TANK DETAILS
SHEET 1 OF 3

NOTE: CITY SIGNATURES VALID FOR ONE YEAR ONLY AFTER DATE OF SIGNATURES

CITY OF HOUSTON
DEPARTMENT OF PUBLIC WORKS AND ENGINEERING

WATER	TRAFFIC & TRANSPORTATION
WASTEWATER	STORM WATER QUALITY
STORM	FACILITIES
STREET & BRIDGE	

FILE NO:
JOB NO: 13889-0002-00

DATE: April 2018
DGN. BY: MRKILLARY
DWG. BY: JASTRUHAR

SCALE: NO SCALE

M2
SHEET No. 15 OF 47

FOR CITY OF HOUSTON USE ONLY
CITY DWG NO.

PUBLIC WORKS AND ENGINEERING — ACCEPTED/APPROVED — 60306 — CITY DRAWING NUMBER — HOUSTON, TEXAS

STATE OF TEXAS — TOBY W. McQUEARY — 93710 — LICENSED — PROFESSIONAL ENGINEER

4-18-2018

GST GENERAL NOTES:

1. Concrete for tank wall panels, dome roof, and riser pipe encasements shall test 4,000 psi minimum at 28 days. Concrete for tank floor, foundation and floor pipe encasements shall test 3,500 psi minimum at 28 days. Other non-structural tank concrete shall test 3,000 psi minimum at 28 days.
2. All concrete reinforcing bars shall conform to ASTM A615 grade 60, except no. 3 bars may conform to grade 40.
3. Detailing and fabrication of concrete reinforcement and accessories shall be in accordance with ACI-315 latest edition.
4. Lap all continuous reinforcing bars 36 diameters at splices, corners and tees, unless noted otherwise.
5. Where called, use welded wire sheets. Welded wire rolls are not acceptable.
6. The use of heat to facilitate the bending of reinforcing bars will not be permitted.
7. All structural steel details and connections shall conform to the latest A.I.S.C. Standards.
8. All structural steel rolled shapes, steel plates and bars shall conform to ASTM A36 latest edition.
9. All steel members and connections exposed to earth or weather shall be hot-dipped galvanized.
10. No engineering drawing may be reproduced for use as shop drawings.
11. Provide wall panel or dome roof reinforcing as per tank manufacturer's recommendations for all inlets, outlets, manways, roof vents, cleanouts and ladders.
12. Pipe penetrations through walls shall have the centerline location determined as recommended by the tank manufacturer and confirmed by the Engineer.
13. All shop welded steel GST interior piping and components shall be coated after fabrication is completed.
14. GST piping and accessories are shown in profile views for detail purposes only. See the "ENLARGED PIPING PLAN" on Sheet C4 and the "GST No. 1 ACCESSORY DETAIL – PLAN VIEW" on Sheet M4 for location and true orientation of piping and accessories.

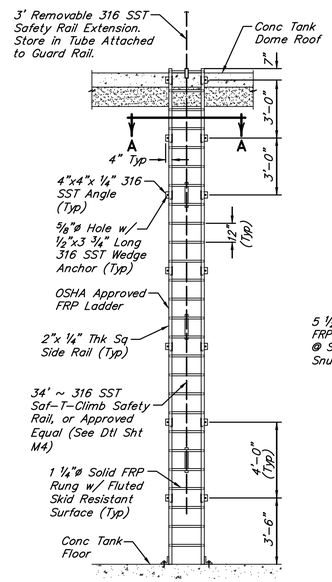

MODIFIED COH F12: INTERIOR LADDER DETAIL

NOT TO SCALE

LADDER NOTES:

1. Ladders and components shall be FRP.
2. Ladders shall be fastened to tank using 316 SST wedge anchors.
3. OSHA approved 316 SST fall protection device to be installed.
4. All FRP surfaces shall be isolated from concrete surfaces using PVC shims.

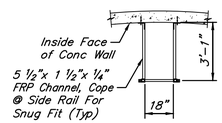

SECTION "A-A"

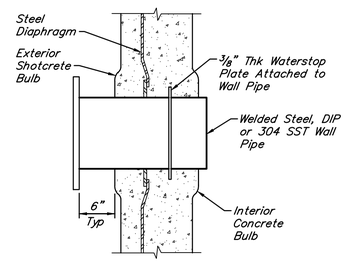

TYPICAL WALL PANEL PIPE PENETRATION DETAIL

NOT TO SCALE

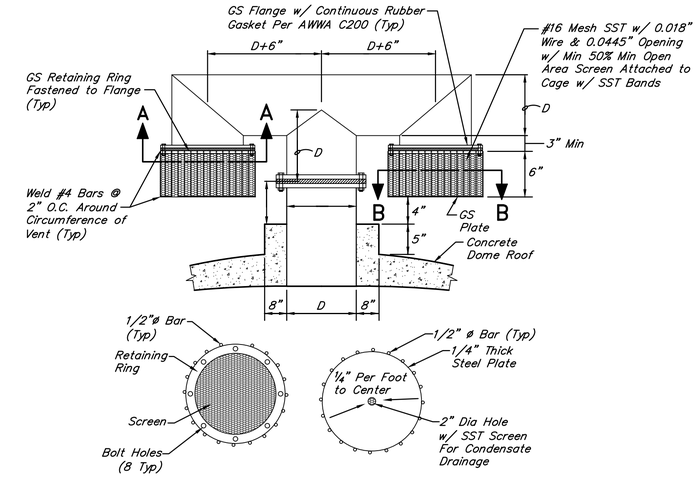

SECTION "A-A"

SECTION "B-B"

ROOF VENT NOTES:

1. Vent to be fabricated from thin wall Schedule 10 steel pipe and hot dipped galvanized or aluminum.
2. Isolation kit required between all dissimilar metals.
3. "D" is the pipe diameter equal to 24 inches (24").
4. Roof vent should be set off center in between roof rafters.
5. All aluminum in contact with concrete shall receive a coat of bitumastic or be isolated by a neoprene gasket.

MODIFIED COH F8: ROOF VENT DETAIL

NOT TO SCALE

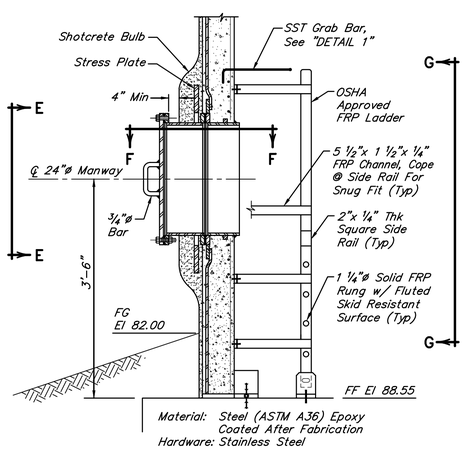

SIDE ELEVATION VIEW

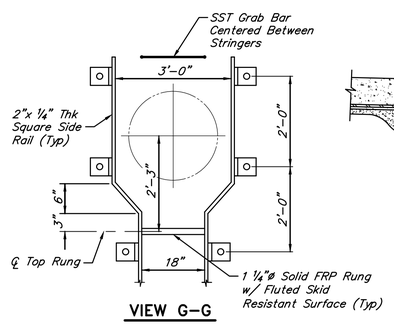

VIEW G-G

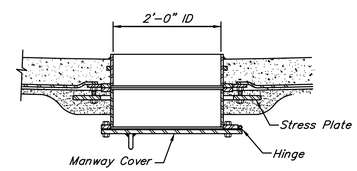

VIEW F-F

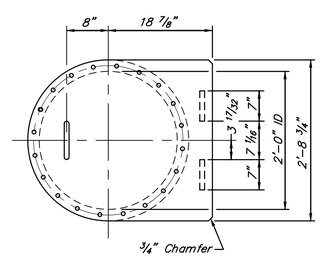

VIEW E-E

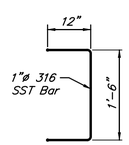

PLAN VIEW

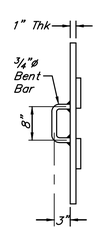

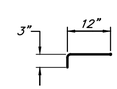

PROFILE

DETAIL 1

NOT TO SCALE

24" DIAMETER SHELL MANWAY DETAILS

NOT TO SCALE

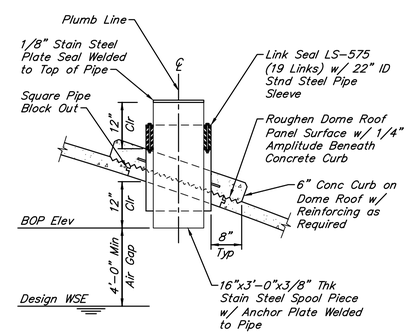

16" DOME ROOF INLET PIPE (FUTURE SURFACE WATER FILL LINE)

NOT TO SCALE

APPROVED: _____ P.E.C. DEVELOPMENT COORDINATOR

DATE: 5/21/18

NO.	DATE	REVISIONS	APP.
1	05/30/18	ISSUED FOR CONSTRUCTION	TWM

FORT BEND COUNTY M.U.D. No. 134E
FORT BEND COUNTY, TEXAS

JONES | CARTER
Texas Board of Professional Engineers Registration No. F-439
6330 West Loop South, Suite 150 • Bellaire, TX 77401 • 713.777.5337

HARVEST GREEN
WATER PLANT No. 1

GROUND STORAGE TANK DETAILS SHEET 2 OF 3

NOTE: CITY SIGNATURES VALID FOR ONE YEAR ONLY AFTER DATE OF SIGNATURES

CITY OF HOUSTON
DEPARTMENT OF PUBLIC WORKS AND ENGINEERING

WATER	TRAFFIC & TRANSPORTATION
WASTEWATER	STORM WATER QUALITY
STORM	FACILITIES
STREET & BRIDGE	

FILE NO:
JOB NO: 13889-0002-00

DATE: April 2018
DGN. BY: MRKILLARY
DWG. BY: JASTRUHAR

SCALE: NO SCALE

M3
SHEET No. 16 OF 47

FOR CITY OF HOUSTON USE ONLY
CITY DWG NO.

PUBLIC WORKS AND ENGINEERING
APPROVED PLAN
60306
CITY OF HOUSTON NUMBER
HOUSTON, TEXAS

STATE OF TEXAS
TOBY W. McCLEARY
93710
LICENSED PROFESSIONAL ENGINEER

4-12-2018

NOTES:

1. Locate hinge to avoid conflict between locking gate and tank wall.
2. Isolate dissimilar metals with insulation kits.
3. Provide a neoprene rubber pad between Cage Cover Security Door and Cage Cover.

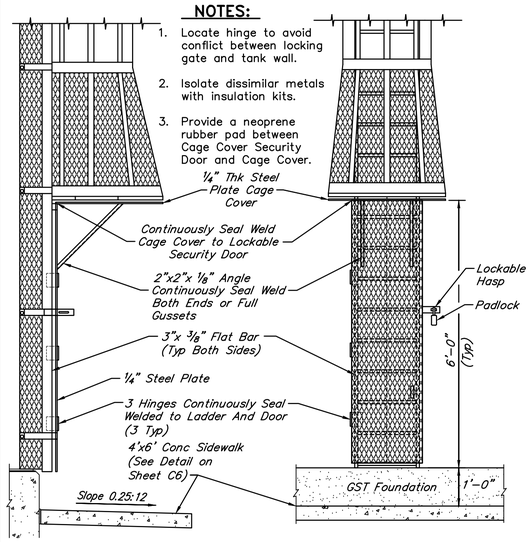

SIDE VIEW

FRONT VIEW

SECURITY DOOR FOR CAGED LADDER

NOT TO SCALE

LADDER NOTES:

1. OSHA compliant fall prevention device shall be installed (S.S.).
2. Ladder material shall be 6061–T6 Aluminum.
3. Install PVC shims between ladder support brackets and Shotcrete pads to isolate the aluminum from the Shotcrete.
4. Ladder shall be connected to tank with 1/2"x3 3/4" LG. 316 S.S. wedge anchors. (12 required)
5. Grind all edges smooth.
6. Butt weld splices of the ladder side rail stock are not permitted. If splices are required during fabrication use the splice plate detail shown on this sheet.
7. Vertical bands shall be placed inside of horizontal bands.

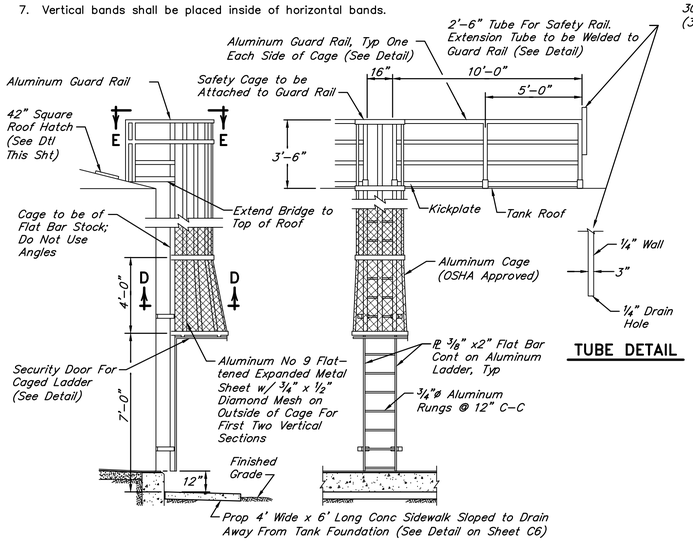

TUBE DETAIL

MODIFIED F11: EXTERIOR LADDER DETAIL

NOT TO SCALE

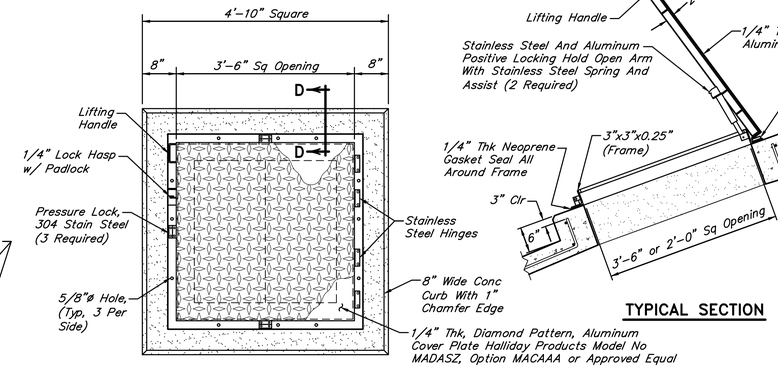

PLAN VIEW

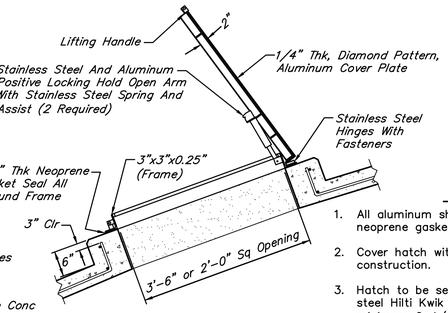

TYPICAL SECTION

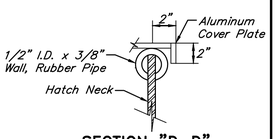

SECTION "D–D"

NOTES:

1. All aluminum shall be isolated from concrete by a neoprene gasket.
2. Cover hatch with polyethylene for protection during construction.
3. Hatch to be secured to concrete curb with stainless steel Hilti Kwik bolts on each side of frame with minimum 2–1/4" embedment. (12 required)
4. Roof hatches to be located so that hatch opens away from tank roof accessories.
5. Cover shall overlap the 3"x3"x0.25" frame by 2" in the downward direction.

MODIFIED COH F10 – DOME ROOF HATCH DETAIL

NOT TO SCALE

NOTE:

Provide two (2) OSHA approved, full body climbing harnesses (buckle type) and safety devices.

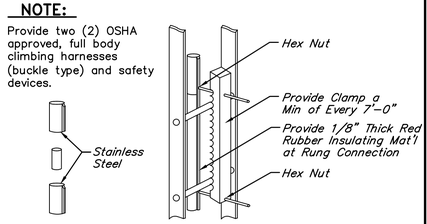

RAIL SPLICE

LADDER RUNG CLAMP

SAFETY RAIL DETAIL

NOT TO SCALE

APPROVED: F.B.C. DEVELOPMENT COORDINATOR

DATE: 5/21/18

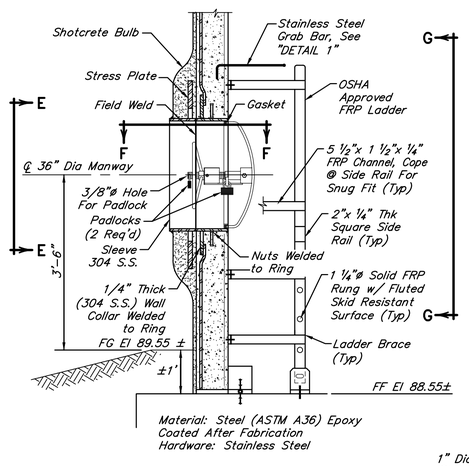

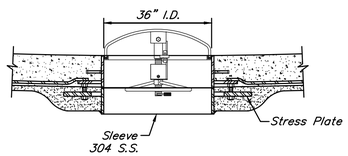

VIEW F–F

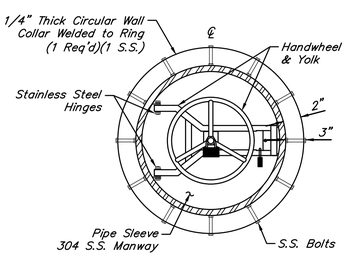

VIEW E–E

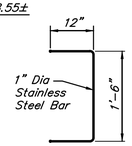

PLAN VIEW

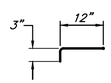

PROFILE

DETAIL 1

NOT TO SCALE

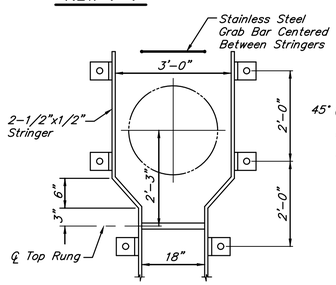

VIEW G–G

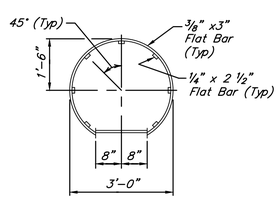

SECTION "D–D"

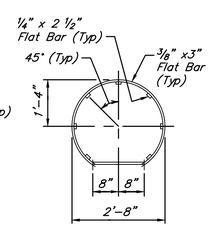

SECTION "E–E"

36" DIA. MANWAY DETAILS

NOT TO SCALE

SAFETY CAGE DETAIL

NOT TO SCALE

GST ACCESSORY NOTES:

1. Anchor a 6"x12" long std. weight SST pipe with oversized cap and eye bolt on dome roof located approximately 2-feet (2') north of roof vent as shown. Bollard to be used for proposed OSHA approved SST cable fall protection device.
2. Hang a 1/4" thick x 9" Deep x 25'-0" long FRP plate from GST Roof to be used as oil skimmer during overflow. Hang it such that it is 6" above and 3" below edge of overflow weir (See detail on Sheet M2).

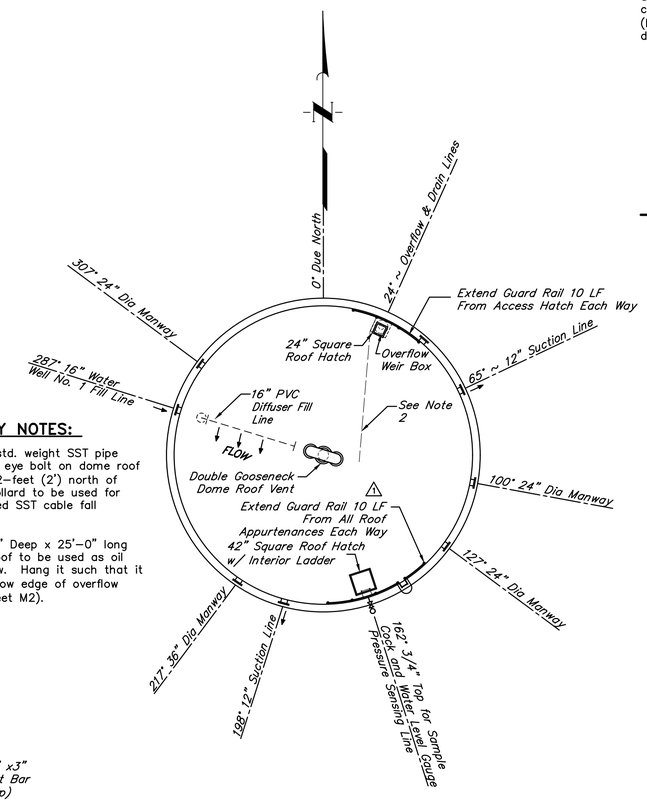

MODIFIED COH F9: GST No. 1 ACCESSORY DETAIL – PLAN VIEW

NOT TO SCALE

4-12-2018

STATE OF TEXAS — TOBY W. McCLEARY — 93710 — LICENSED PROFESSIONAL ENGINEER

NO.	DATE	REVISIONS	APP.
2	05/30/18	ISSUED FOR CONSTRUCTION	TWM
1	04/20/18	REVISIONS PER ADDENDUM No. 2	TWM

FORT BEND COUNTY M.U.D. No. 134E
FORT BEND COUNTY, TEXAS

JONES | CARTER
Texas Board of Professional Engineers Registration No. F-439
6330 West Loop South, Suite 150 • Bellaire, TX 77401 • 713.777.5337

HARVEST GREEN WATER PLANT No. 1

GROUND STORAGE TANK DETAILS SHEET 3 OF 3

NOTE: CITY SIGNATURES VALID FOR ONE YEAR ONLY AFTER DATE OF SIGNATURES

CITY OF HOUSTON
DEPARTMENT OF PUBLIC WORKS AND ENGINEERING

WATER	04/12/18	TRAFFIC & TRANSPORTATION	
WASTEWATER	4/12/18	STORM WATER QUALITY	
STORM	5-12-18	FACILITIES	04/12/18
STREET & BRIDGE			

FILE NO:
JOB NO: 13889-0002-00

DATE: April 2018
DGN. BY: MRKILLARY
DWG. BY: JASTRUHAR

SCALE: NO SCALE

M4
SHEET No. 17 OF 47

FOR CITY OF HOUSTON USE ONLY
CITY DWG NO.

PUBLIC WORKS AND ENGINEERING — 60306 — CITY OF HOUSTON, TEXAS

K:\13889\13889-0002-00 Water Plant No. 1\2 Design Phase\CAD\Plans\Archive\Conformed Dwgs\MISCD.dwg May 30,2018 – 2:51pm jrb

C.O.H. LOG No. 18–0447

COH BLK REV. JAN 2006

NOTES:

1. Apply paint to all welds, threads and any areas scraped during construction.
2. Booster pump can to be installed per Hydraulic Institute Standards.
3. Booster pump can elevations represent the minimum required elevations. Actual elevations may vary based on approved manufacturer shop drawings.

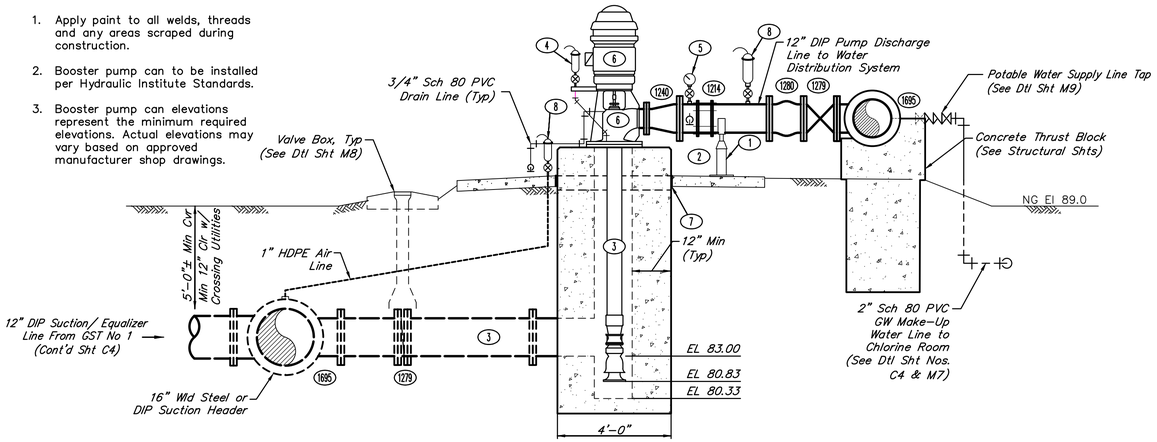

BOOSTER PUMP PIPING DETAILS (TYP) – PROFILE VIEW

SCALE: 3/8"=1'-0"

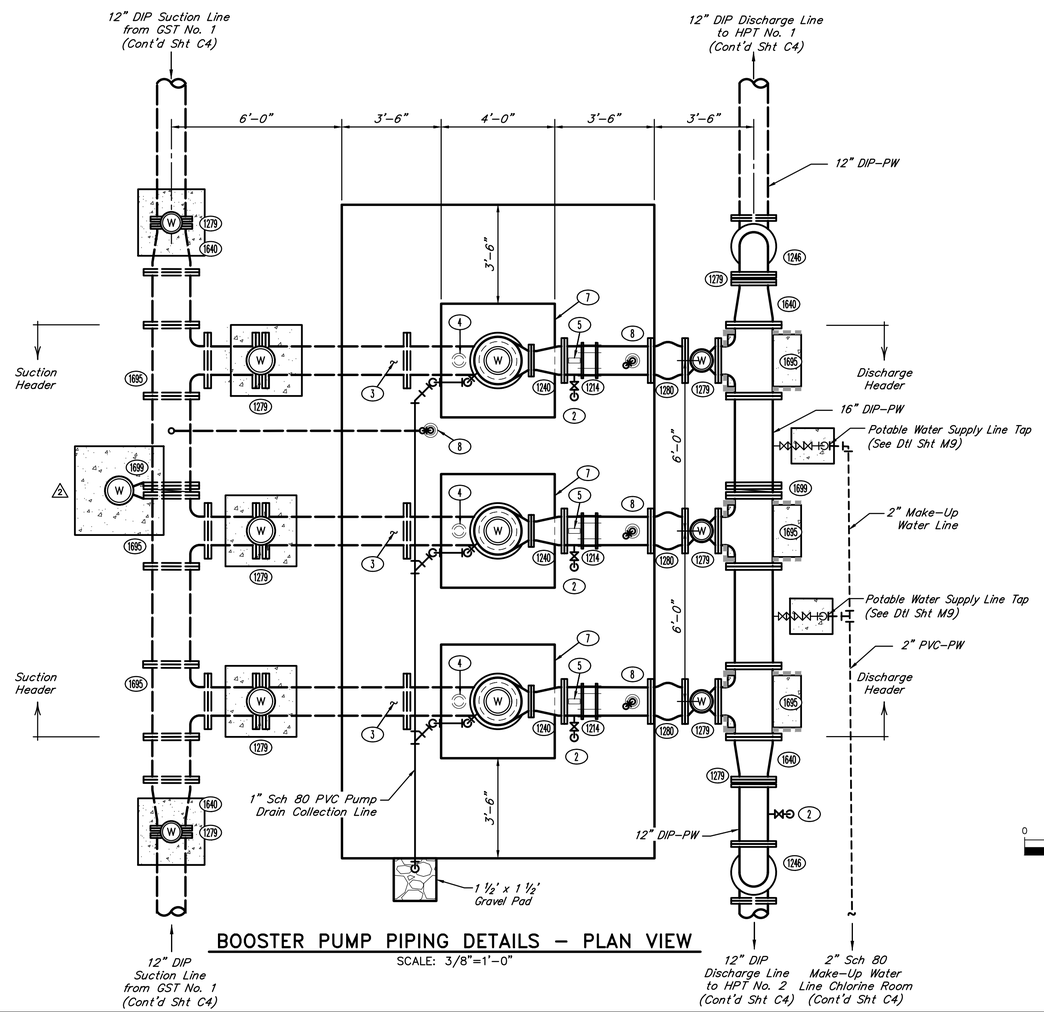

BOOSTER PUMP PIPING DETAILS – PLAN VIEW

SCALE: 3/8"=1'-0"

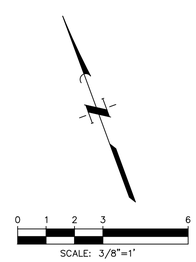

PRESSURE GAUGE NOTES:

1. All pipe and fittings shall be 304 SST.
2. Discharge piping sample cocks shall be located a minimum 4–inches (4") above the top of piping.
3. Suction piping sample cocks shall be located a minimum 6–inches (6") above the top elevation of stepover grating.

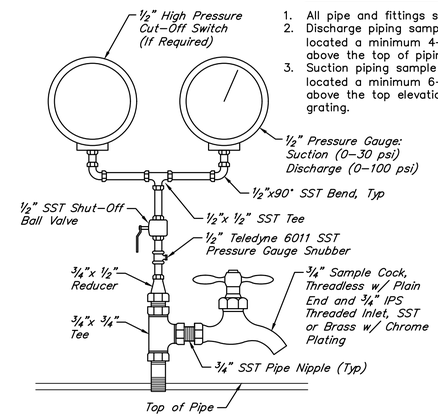

PRESSURE GAUGE AND SAMPLE TAP ASSEMBLY DETAIL

NOT TO SCALE

BOOSTER PUMP ACCESSORY CHART:

1. 4" Adjustable Steel Pipe Support (See Detail Sheet *M8*)
2. 3/4" Sample Cock Assembly (SC–03–101 to SC–03–301) (See Detail Sheet *M8*)
3. 16" Booster Pump Can w/ 12" Wld Steel Inlet, FJ. Can and Inlet Pipe Shall Be One–Piece Construction and Hot–Dip Galvanized After Fabrication.
4. 1/2" Air Release Valve, APCO Model No 50, w/ 3/32" Orifice, No 16 Mesh, 316 Stain Steel Screen on Discharge and Shut–Off Ball Valve. Attach to Discharge Head. (ARV–03–101 to ARV–03–301 & BV–03–102 to BV–03–302)
5. Pressure Gauge (0–100 psi) w/ Shut–Off Ball Valve and high Pressure Cut off Switch (PI 03101 to PI 03301)
6. 1,000–GPM Vertical Turbine Booster Pump w/ 60–HP Motor (BP–03–101 to BP–03–301)
7. Isolation Joint (See Detail Sheet *C6*)
8. 1" Air Release Valve, APCO Model No. 50 w/ 3/32" Orifice, No. 16 Mesh, 316 Stain Steel Screen on Discharge and Shut–Off Ball Valve. (ARV–03–001, ARV–03–102 to ARV–03–302 & BV–03–001, BV–03–104 to BV–03–304)

PIPING CHART:

- (1214) 12" Flanged Coupling Adapter
- (1240) 12"x8" Concentric Reducer, FJ
- (1246) 12"x90° Bend, FJ
- (1279) 12" NRS Gate Valve, FJ (GTV–03–001 to GTV–03–302)
- (1280) 12" Silent Globe Check Valve, FJ (SCK–03–101 to SCK–03–301)
- (1614) 16" Flexible Coupling, MJ
- (1640) 16"x12" Concentric Reducer, FJ
- (1695) 16"x12" Tee, FJ
- (1699) 16" Butterfly Valve, FJ (BFV–03–001 to BFV–03–002)

PIPING NOTES:

1. All pipe to be ductile iron pipe (DIP) unless otherwise noted.
2. Denotes the use of a restrained, push–on connection.

APPROVED: _____ H.B.C. DEVELOPMENT COORDINATOR

DATE: 5/21/18

NO.	DATE	REVISIONS	APP.
3	05/30/18	ISSUED FOR CONSTRUCTION	TWH
2	04/20/18	REVISIONS PER ADDENDUM No. 2	TWH
1	04/13/18	REVISIONS PER ADDENDUM No. 1	TWH

FORT BEND COUNTY M.U.D. No. 134E
FORT BEND COUNTY, TEXAS

JONES | CARTER
Texas Board of Professional Engineers Registration No. F-439
6330 West Loop South, Suite 150 • Bellaire, TX 77401 • 713.777.5337

HARVEST GREEN WATER PLANT No. 1

BOOSTER PUMP PIPING & DETAILS

NOTE: CITY SIGNATURES VALID FOR ONE YEAR ONLY AFTER DATE OF SIGNATURES

CITY OF HOUSTON
DEPARTMENT OF PUBLIC WORKS AND ENGINEERING

WATER: 10-04-2018	TRAFFIC & TRANSPORTATION
WASTEWATER: 4/4/18	STORM WATER QUALITY
STORM: 4-12-18	FACILITIES: 4/20/2018
STREET & BRIDGE	

FILE NO:
JOB NO: 13889-0002-00

DATE: April 2018
DGN. BY: MRKILLARY
DWG. BY: JASTRUHAR

SCALE: NO SCALE

M5
SHEET No. 18 OF 47

FOR CITY OF HOUSTON USE ONLY
CITY DWG NO.

STATE OF TEXAS
TOBY W. McQUEARY
93710
LICENSED PROFESSIONAL ENGINEER
4-12-2018

60306
CITY OF HOUSTON
HOUSTON, TEXAS

ORIGINAL SCALE IN INCHES FOR REDUCED PLANS

CONFORMED DOCUMENTS

NOTES:

1. All piping penetrations through the control building walls shall be tightly sealed with approved grout.

HYDROPNEUMATIC TANK PRESSURE	PIT SETTINGS	
DESCRIPTION	On/Open (psi)	Off/Closed (psi)
Start and Stop Lead Booster Pump	60	65
Start and Stop 1st Lag Booster Pump	55	60
Start and Stop 2nd Lag Booster Pump	50	55
Open and Close Air Compressor Purge Valve	50	70
Spare With Globe Valve		

LEVEL CONTROLLER SWITCH SETTINGS	
LS1	Provides Operational Sensing For Hydro-Tank at 60% Air, 40% Water Level.
LS2	Provides High Level Alarm at 25% Air, 75% Water Level.

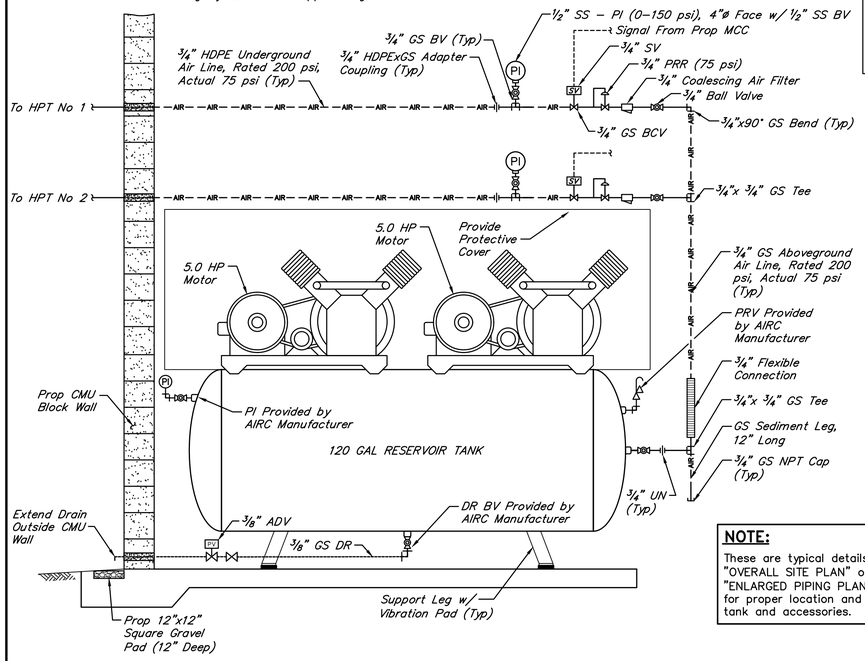

HORIZONTAL DUPLEX AIR COMPRESSOR DETAIL

NOT TO SCALE

NOTE:

These are typical details only. See "OVERALL SITE PLAN" on Sheet C2 and "ENLARGED PIPING PLAN" on Sheet C4 for proper location and orientation of tank and accessories.

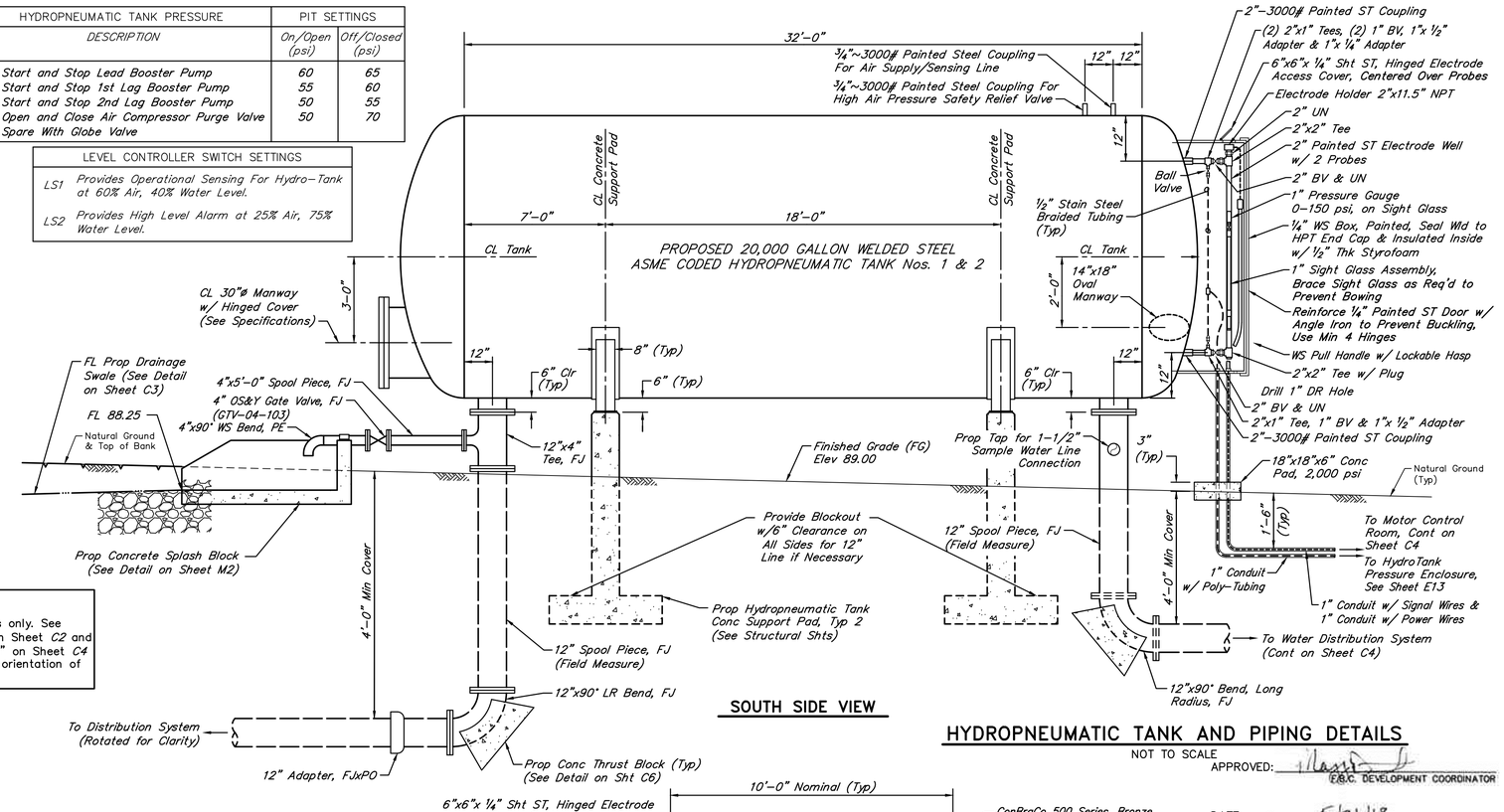

SOUTH SIDE VIEW

HYDROPNEUMATIC TANK AND PIPING DETAILS

NOT TO SCALE

TANK CONSTRUCTION NOTES:

1. The ASME stamped hydropneumatic tank shall conform to the latest edition of Section VIII, Division 1, American Society of Mechanical Engineers Boiler and Pressure Vessel Code.
2. See Contract Specification Section 09920 for protective coating procedures.
3. All fasteners shall be stainless steel per ASTM F593/594–304, ASTM A325 or Equal (Galvanized).
4. Latch on hydropneumatic tank door must be within five feet (5') of finished grade.
5. Hydropneumatic tank door must open easily without binding.
6. The system must be able to operate on both proposed and tanks together using an equalizer line or on either tank independently using manual cut–offs. Therefore, separate air lines and sensing lines are required for each tank.

TANK STRUCTURAL NOTES:

1. All concrete shall test 4000 PSI at 28 days.
2. Detailing and fabrication of concrete reinforcement and accessories shall be in accordance with ACI–315 latest edition.
3. All structural steel details and connections shall conform to the standard of the A.I.S.C.
4. All steel members and connections exposed to earth or weather shall be hot–dipped galvanized.
5. Field paint all welds on galvanized steel with "Galvweld" or approved equal.
6. No Engineering drawings may be reproduced for use as shop drawings.
7. See Structural Sheets for concrete supports.

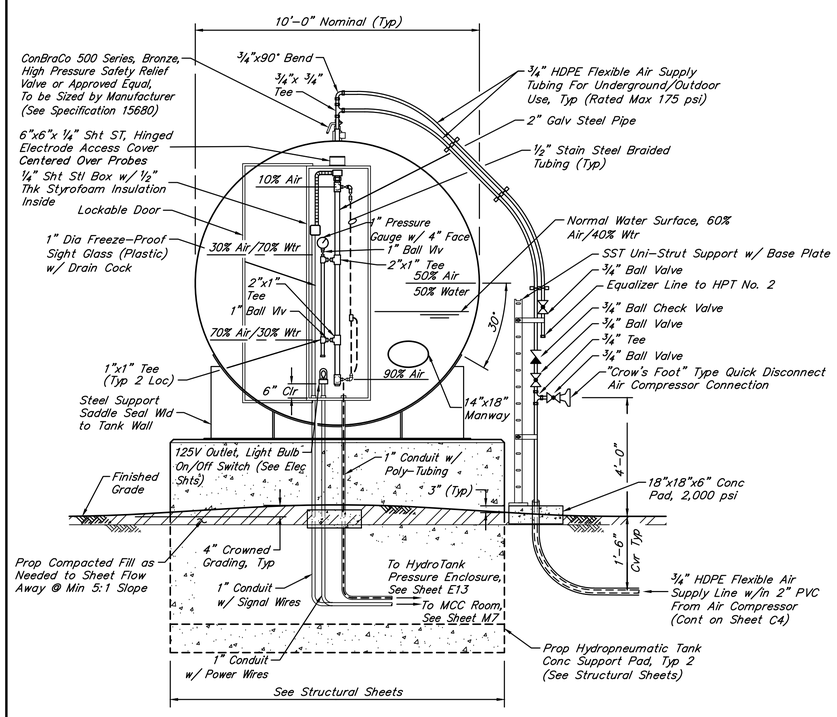

HPT No. 1 END VIEW

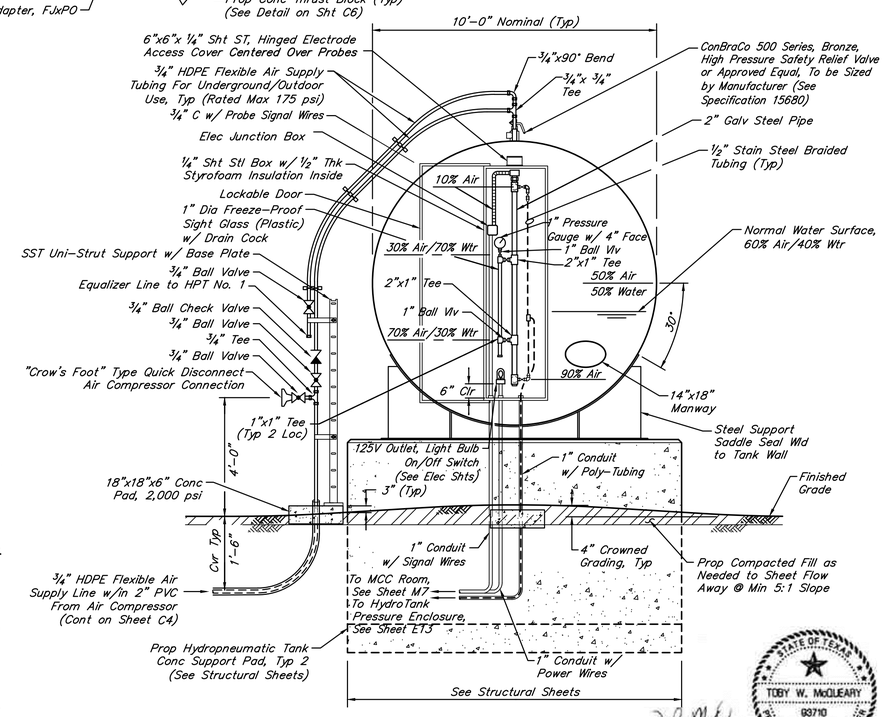

HPT No. 2 END VIEW

APPROVED: F.B.C. DEVELOPMENT COORDINATOR

DATE: 5/21/18

NO.	DATE	REVISIONS	APP.
1	05/30/18	ISSUED FOR CONSTRUCTION	TWM

FORT BEND COUNTY M.U.D. No. 134E
FORT BEND COUNTY, TEXAS

JONES|CARTER
Texas Board of Professional Engineers Registration No. F-439
6330 West Loop South, Suite 150 • Bellaire, TX 77401 • 713.777.5337

HARVEST GREEN WATER PLANT No. 1

HYDROPNUEMATIC TANK & DETAILS

NOTE: CITY SIGNATURES VALID FOR ONE YEAR ONLY AFTER DATE OF SIGNATURES

CITY OF HOUSTON
DEPARTMENT OF PUBLIC WORKS AND ENGINEERING

WATER	TRAFFIC & TRANSPORTATION
WASTEWATER	STORM WATER QUALITY
STORM	FACILITIES
STREET & BRIDGE	

FILE NO:
JOB NO: 13889–0002–00

DATE: April 2018
DGN. BY: MRKILLARY
DWG. BY: JASTRUHAR

SCALE: NO SCALE

M6
SHEET No. 19 OF 47

FOR CITY OF HOUSTON USE ONLY
CITY DWG NO.

PUBLIC WORKS AND ENGINEERING
60306
CITY DRAWING NUMBER
HOUSTON, TEXAS

STATE OF TEXAS
TOBY W. McCLEARY
83710
LICENSED PROFESSIONAL ENGINEER

4-11-2018

K:\13889\13889–0002–00 Water Plant No. 1\2 Design Phase\CAD\Plans\Archive\Conformed Dwgs\MISCD.dwg May 30,2018 – 2:52pm jrb

C.O.H. LOG No. 18–0447

COH BLK REV. JAN 2006

ORIGINAL SCALE IN INCHES FOR REDUCED PLANS

CONFORMED DOCUMENTS

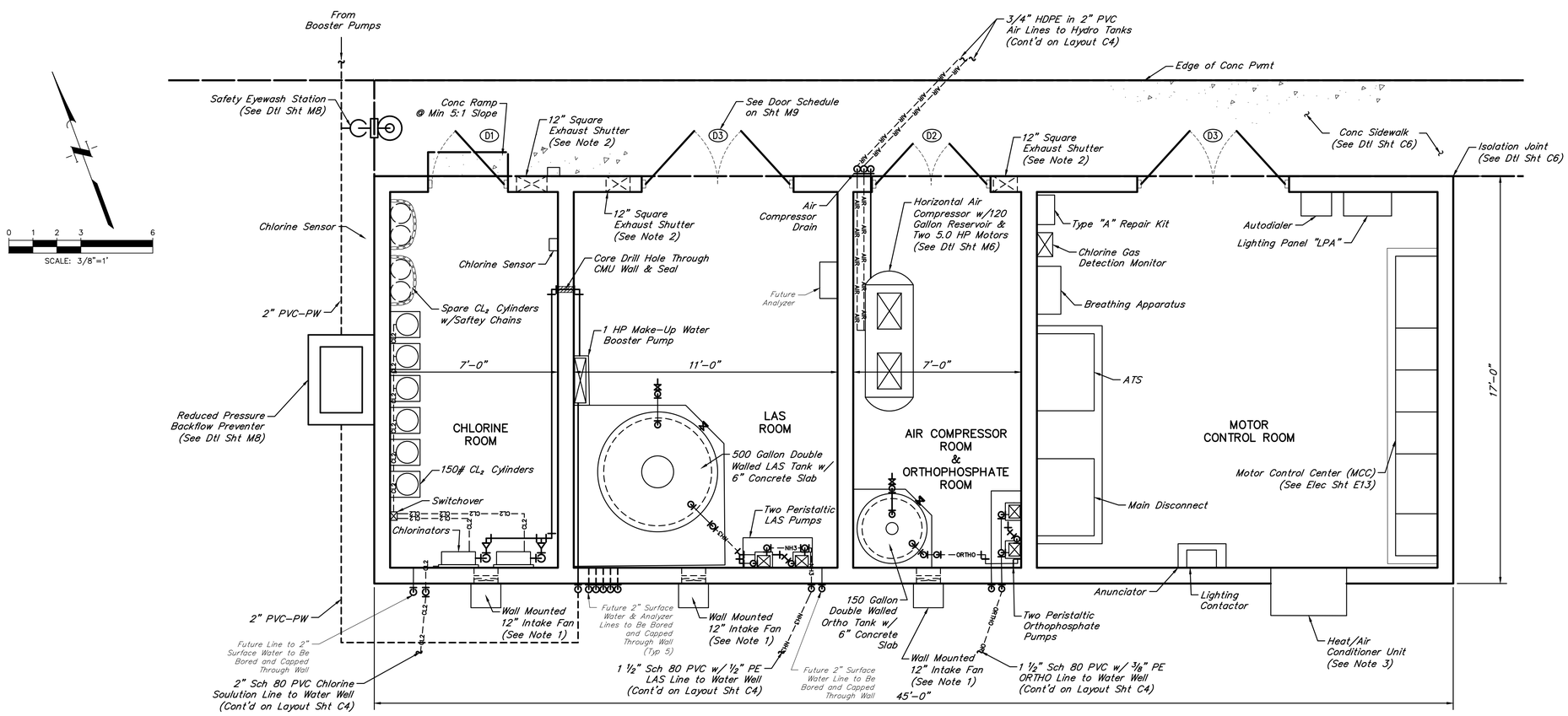

CONTROL BUILDING EQUIPMENT NOTES:

1. Provide and install three (3) wall-mounted, automatic shutter mounted fiberglass air intake fan with fiberglass reinforced polypropylene propellers, capable of delivering a minimum 900 CFM free air flow at ¼-inch (0.25") static pressure (SP), and rated at no more than one twentieth horsepower (1/20 HP) in the chlorine storage room. Contractor shall furnish an OSHA wire mesh safety guard and a corrosion and UV resistant weatherproof fan shroud with removable framed fiberglass (FRP) insect screen for wall fan. The fan motor shall be a single speed, totally enclosed, sleeve or ball bearing 115-volt, 60-hertz type or approved substitute. Locate and mount fan as shown in details on Sheet M8 and as specified in the contract specifications.
2. Provide and install three (3) 12-inch (12") square, wall-mounted, gravity operated fiberglass air exhaust shutters. Shutter shall be capable of providing a minimum 900 CFM free air flow at 0.25" SP. Contractor shall furnish a removable framed fiberglass (FRP) insect screen over wall opening for each shutter. Locate and mount shutter as shown in details on Sheet M8 and as specified in the contract specifications.
3. Provide and install one (1) through the wall exterior mounted electric heat air conditioner, Bard Model No W12AAAA05 or approved equal, capable of a minimum 11,500 btu heater output and 11,000 btu air conditioner output. Mount the unit in the control room using a through wall sleeve, with top of unit approx. six-foot (6') above the finished floor.
4. Install a windsock on the control building visible from all directions and according to the contract specifications.
5. All building wall penetrations shall be tightly sealed with an approved grout.

PIPING NOTES:

1. All piping penetrations through the control building walls shall be tightly sealed with approved grout.
2. Piping schematically shown. Locate along wall w/ FRP supports and 316 SST hardware. Contractor to provide piping supports and wall mounts inside building.
3. Contractor shall construct all poly tube solution lines encased in SCH 80 PVC electrical conduit and use only long sweep elbows to allow tubing to be easily repaired and/or replaced in the future.

APPROVED: _____ F.B.C. DEVELOPMENT COORDINATOR

DATE: 5/21/18

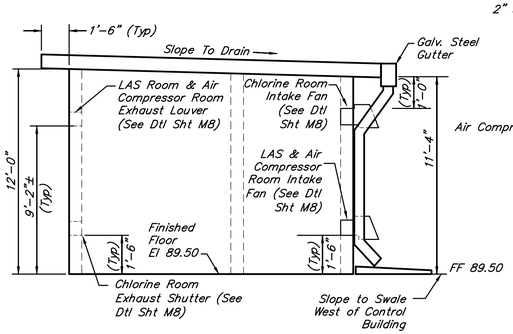

BUILDING ELEVATION – WEST SIDE (LOOKING EAST)

NOT TO SCALE

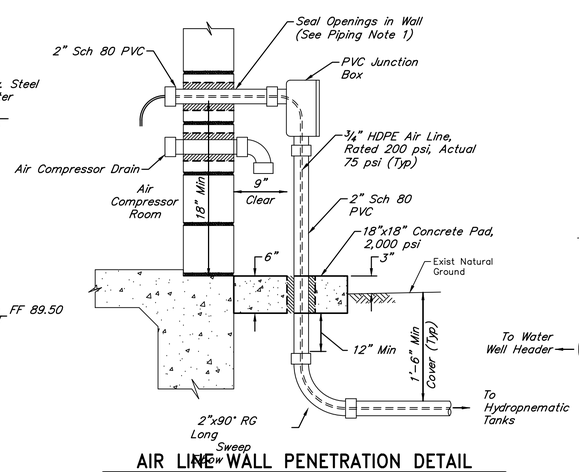

AIR LINE WALL PENETRATION DETAIL

NOT TO SCALE

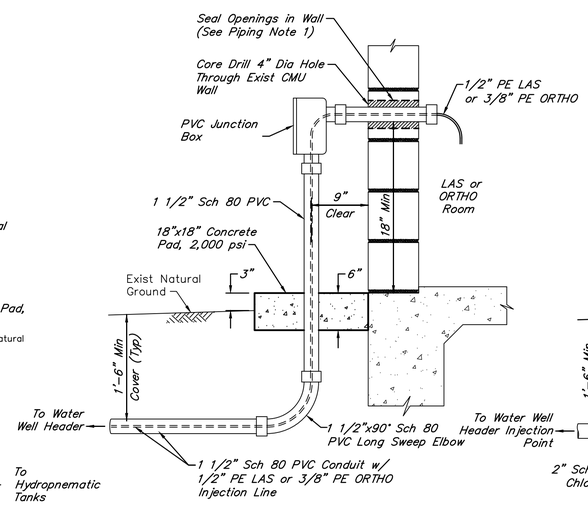

LAS/ORTHO WALL PENETRATION DETAIL

NOT TO SCALE

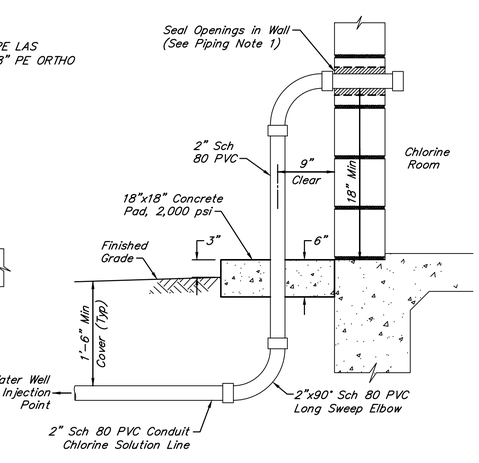

CHLORINE SOLUTION LINE WALL PENETRATION DETAIL

NOT TO SCALE

STATE OF TEXAS — TOBY W. McQUEARY 93710 — LICENSED PROFESSIONAL ENGINEER

4-12-2018

NO.	DATE	REVISIONS	APP.
1	05/30/18	ISSUED FOR CONSTRUCTION	TWM

FORT BEND COUNTY M.U.D. No. 134E
FORT BEND COUNTY, TEXAS

JONES | CARTER
Texas Board of Professional Engineers Registration No. F-439
6330 West Loop South, Suite 150 • Bellaire, TX 77401 • 713.777.5337

HARVEST GREEN WATER PLANT No. 1

CONTROL BUILDING & ACCESSORIES DETAILS

NOTE: CITY SIGNATURES VALID FOR ONE YEAR ONLY AFTER DATE OF SIGNATURES

CITY OF HOUSTON
DEPARTMENT OF PUBLIC WORKS AND ENGINEERING

WATER	04/12/18	TRAFFIC & TRANSPORTATION	
WASTEWATER	4/17/18	STORM WATER QUALITY	
STORM	5/2/18	FACILITIES	04/17/18
STREET & BRIDGE			

FILE NO:
JOB NO: 13889-0002-00

FOR CITY OF HOUSTON USE ONLY
CITY DWG NO.

DATE: April 2018
DGN. BY: MRKILLARY
DWG. BY: JASTRUHAR

SCALE: NO SCALE

M7
SHEET No. 20 OF 47

PUBLIC WORKS AND ENGINEERING — REGISTERED — 60306 — CITY OF HOUSTON — HOUSTON, TEXAS

K:\13889\13889-0002-00 Water Plant No. 1\2 Design Phase\CAD\Plans\Archive\Conformed Dwgs\SITE.dwg May 30,2018 – 2:52pm jrb

C.O.H. LOG No. 18-0447

COH BLK REV. JAN 2006

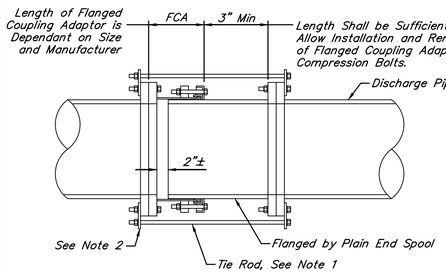

NOTES:

1. Provide a number of tie rods equal to 1/2 the number of flange bolts. Evenly space installation of tie rods. Diameter of tie rods to be equal to the diameter of flange bolts. Length of tie rods to be determined by contractor based on size and manufacturer of flanged coupling adaptor and final length of spool piece.
2. Provide 316 S.S. tab for attachment of tie rods. Size to be determined by contractor.
3. Contractor to submit details during shop drawing submission.
4. All hardware shall be 316 stainless steel. Tie rods should be threaded.
5. This restraint does not replace thrust blocks to be provided at other locations.

TYPICAL FLANGED COUPLING ADAPTOR RESTRAINT DETAIL

NOT TO SCALE

NOTE:
Insulate assembly for freeze protection.

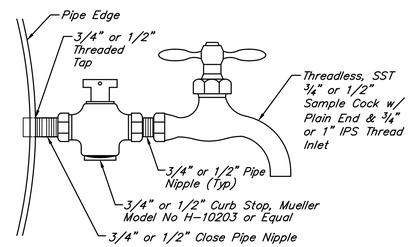

TYPICAL WATER SAMPLE COCK DETAIL

NOT TO SCALE

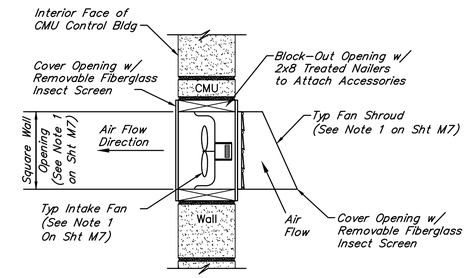

CHLORINE ROOM INTAKE FAN SCHEMATIC

NOT TO SCALE

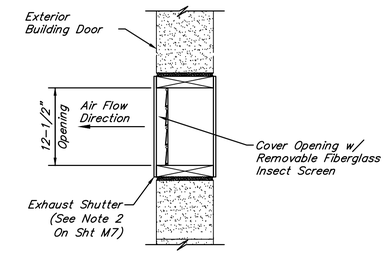

CHLORINE ROOM EXHAUST SHUTTER SCHEMATIC

NOT TO SCALE

NOTE:
Apply galvanizing paint to all welds and any areas scraped during construction.

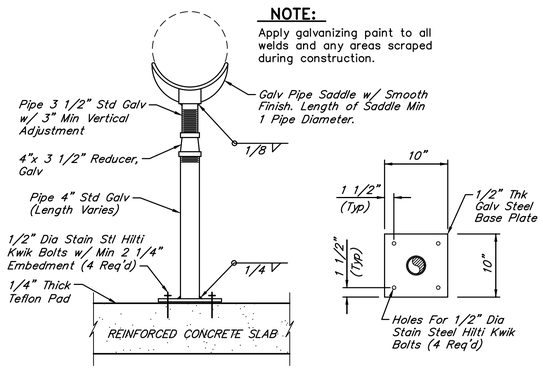

ADJUSTABLE STEEL PIPE SUPPORT

NOT TO SCALE

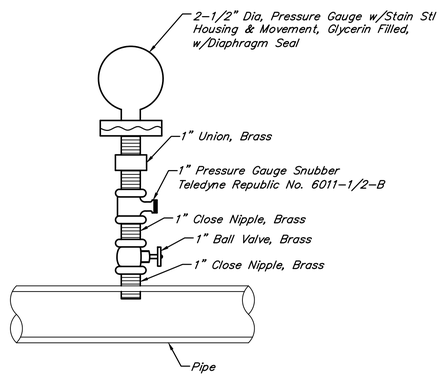

PRESSURE GAUGE W/DIAPHRAGM SEAL DETAIL

NOT TO SCALE

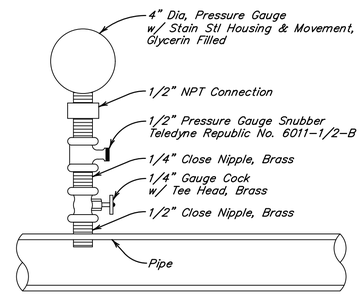

PRESSURE GAUGE DETAIL

NOT TO SCALE

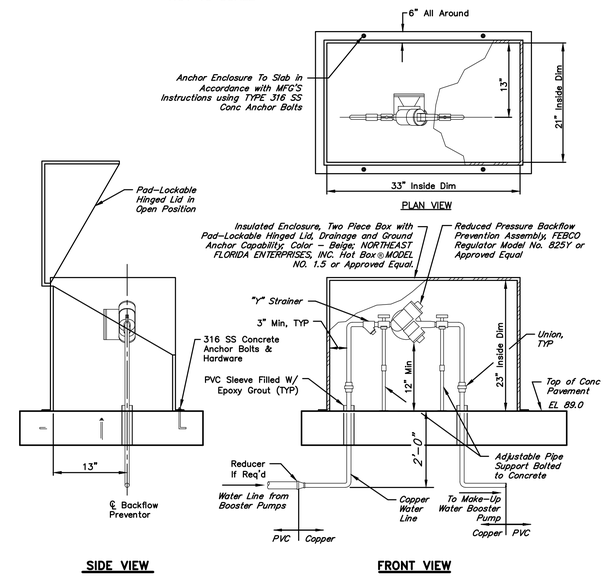

REDUCED PRESSURE BACKFLOW PREVENTER INSTALLATION

NOT TO SCALE

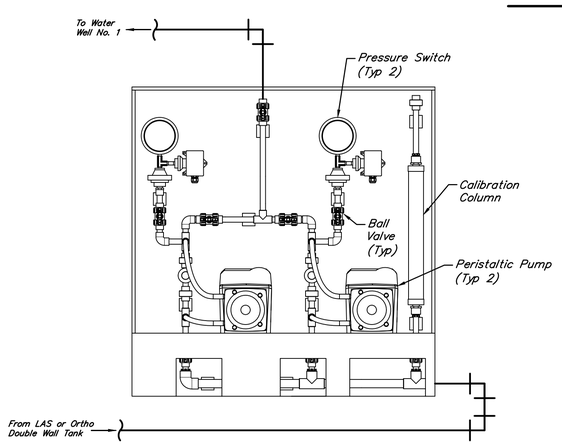

PERISTALTIC PUMP SKID DETAIL

NOT TO SCALE

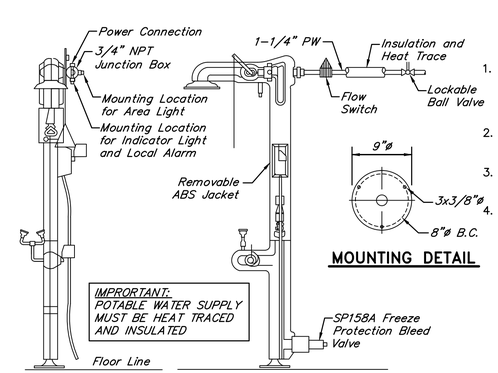

MOUNTING DETAIL

NOTES:

1. At the Contractor's option and depending on location of water supply location, the water supply can be connected at either manufacturer provided supply connection, top or bottom.
2. Interior shower same, except without removable abs jacket and insulation w/ heat trace.
3. Provide Bradley Corporation model S19-300B, Speakman model DE-7000 or approved equal.
4. Eyewash station shall be mounted to concrete pad with stainless steel bolts.

EMERGENCY SHOWER/EYEWASH DETAIL

NOT TO SCALE

STATE OF TEXAS
TOBY W. McCLEARY
83710
LICENSED PROFESSIONAL ENGINEER
4-12-2018

APPROVED: F.B.C. DEVELOPMENT COORDINATOR

DATE: 5/21/18

NO.	DATE	REVISIONS	APP.
1	05/30/18	ISSUED FOR CONSTRUCTION	TWM

FORT BEND COUNTY M.U.D. No. 134E
FORT BEND COUNTY, TEXAS

JONES | CARTER
Texas Board of Professional Engineers Registration No. F-439
6330 West Loop South, Suite 150 • Bellaire, TX 77401 • 713.777.5337

HARVEST GREEN
WATER PLANT No. 1

MISCELLANEOUS MECHANICAL DETAILS SHEET 1 OF 2

NOTE: CITY SIGNATURES VALID FOR ONE YEAR ONLY AFTER DATE OF SIGNATURES

CITY OF HOUSTON
DEPARTMENT OF PUBLIC WORKS AND ENGINEERING

WATER	4/12/18	TRAFFIC & TRANSPORTATION	
WASTEWATER	4/12/18	STORM WATER QUALITY	
STORM	4/12/18	FACILITIES	4-12-18
STREET & BRIDGE			

FILE NO:
JOB NO: 13889-0002-00

DATE: April 2018
DGN. BY: MRKILLARY
DWG. BY: JASTRUHAR

SCALE: NO SCALE

M8
SHEET No. 21 OF 47

FOR CITY OF HOUSTON USE ONLY
CITY DWG NO.

PUBLIC WORKS AND ENGINEERING
ACCEPTED AND FILED
60306
CITY OF HOUSTON, TEXAS

NOTE:

All proposed aboveground chemical solution injection lines exposed to weather are to be insulated.

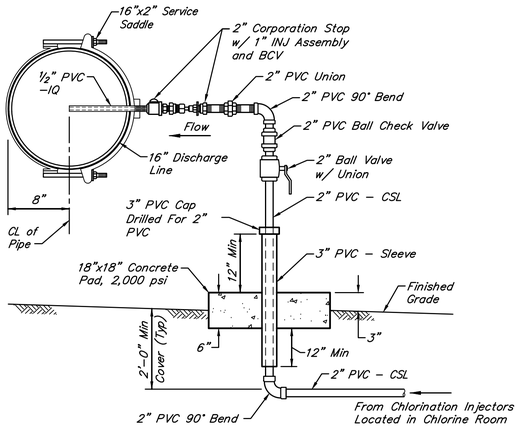

CHLORINE SOLUTION (CSL) INJECTION TAP DETAIL

NOT TO SCALE

NOTE:

All proposed aboveground chemical solution injection lines exposed to weather are to be insulated.

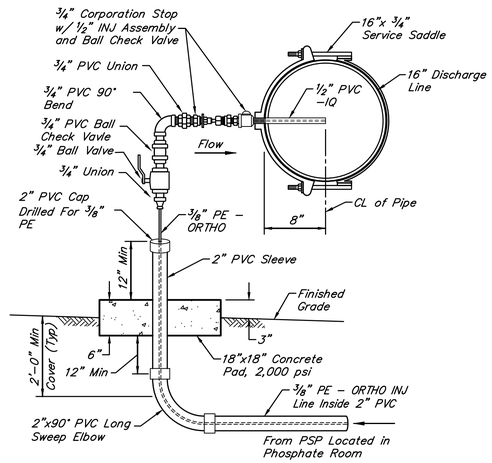

ORTHO INJECTION TAP DETAIL

NOT TO SCALE

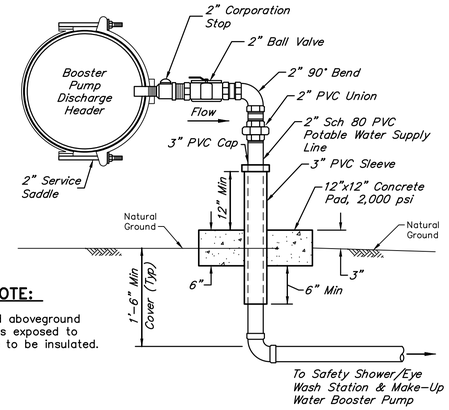

NOTE:

All proposed aboveground solution lines exposed to weather are to be insulated.

POTABLE WATER (PW) SUPPLY LINE TAP DETAIL

NOT TO SCALE

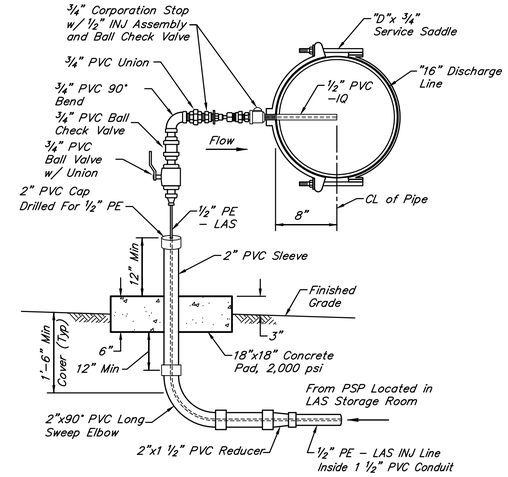

CONTRACTOR NOTES:

1. All proposed aboveground chemical injection lines exposed to weather are to be insulated.
2. "D" is equal to the pipe diameter.

LAS INJECTION TAP DETAIL

NOT TO SCALE

PIPING NOTES:

1. Contractor shall construct ALL POLY–TUBE solution lines encased in Schedule 80 PVC electrical conduit and use only long sweep elbows to allow tubing to be easily repaired and/or replaced in the future.
2. All chemical injection lines and taps shall be constructed as per the referenced detail drawings unless approved otherwise by the Engineer prior to making any changes.
3. All underground PVC piping and electrical conduit shall be laid free of stress with the longest available commercial standard lengths of pipe to minimize the number of joints. Whenever possible, the piping shall be bent in the trench using large radius curves to minimize the number of fittings used and reduce head loss in the pipe. The minimum bending radius of each type of PVC pipe shall not be smaller than the radius recommended by the pipe manufacturer.

DOOR SCHEDULE

NO.	DESCRIPTION
D1	36" WIDE x 84" WALK IN FRP CHEMICAL RESISTANT DOOR w/ EXHAUST LOUVER
D2	60" WIDE x 84" DUAL WALK IN FRP CHEMICAL RESISTANT DOOR
D3	76" WIDE x 84" DUAL WALK IN FRP CHEMICAL RESISTANT DOORS

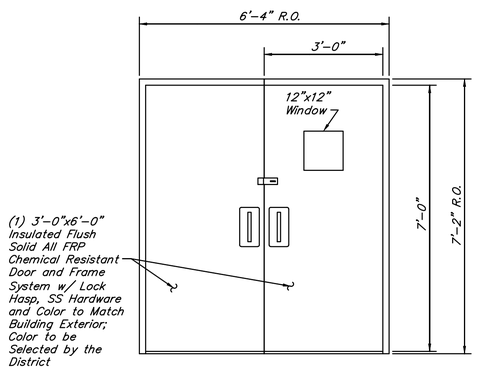

TYPICAL DUAL DOOR DETAIL

NOT TO SCALE

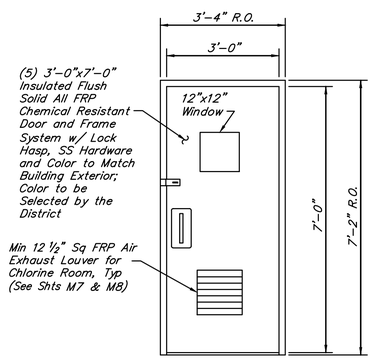

TYPICAL SINGLE DOOR DETAIL

NOT TO SCALE

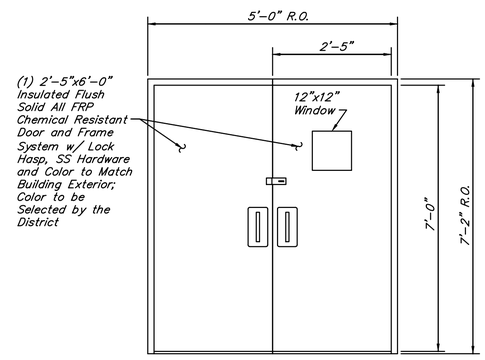

ORTHO DUAL DOOR DETAIL

NOT TO SCALE

APPROVED: _____ F.B.C. DEVELOPMENT COORDINATOR

DATE: 5/21/18

NO.	DATE	REVISIONS	APP.
1	05/30/18	ISSUED FOR CONSTRUCTION	TWM

FORT BEND COUNTY M.U.D. No. 134E
FORT BEND COUNTY, TEXAS

JONES | CARTER
Texas Board of Professional Engineers Registration No. F-439
6330 West Loop South, Suite 150 • Bellaire, TX 77401 • 713.777.5337

HARVEST GREEN WATER PLANT No. 1

MISCELLANEOUS MECHANICAL DETAILS SHEET 2 OF 2

NOTE: CITY SIGNATURES VALID FOR ONE YEAR ONLY AFTER DATE OF SIGNATURES

CITY OF HOUSTON
DEPARTMENT OF PUBLIC WORKS AND ENGINEERING

WATER	4/12/18	TRAFFIC & TRANSPORTATION	
WASTEWATER	4/12/18	STORM WATER QUALITY	
STORM	4-12-18	FACILITIES	4/12/18
STREET & BRIDGE			

FILE NO:
JOB NO: 13889–0002–00

DATE: April 2018
DGN. BY: MRKILLARY
DWG. BY: JASTRUHAR

SCALE: NO SCALE

M9
SHEET No. 22 OF 47

FOR CITY OF HOUSTON USE ONLY
CITY DWG NO.

STATE OF TEXAS
TOBY W. McQUEARY
93710
LICENSED PROFESSIONAL ENGINEER

4-12-2018

60306

CONFORMED DOCUMENTS

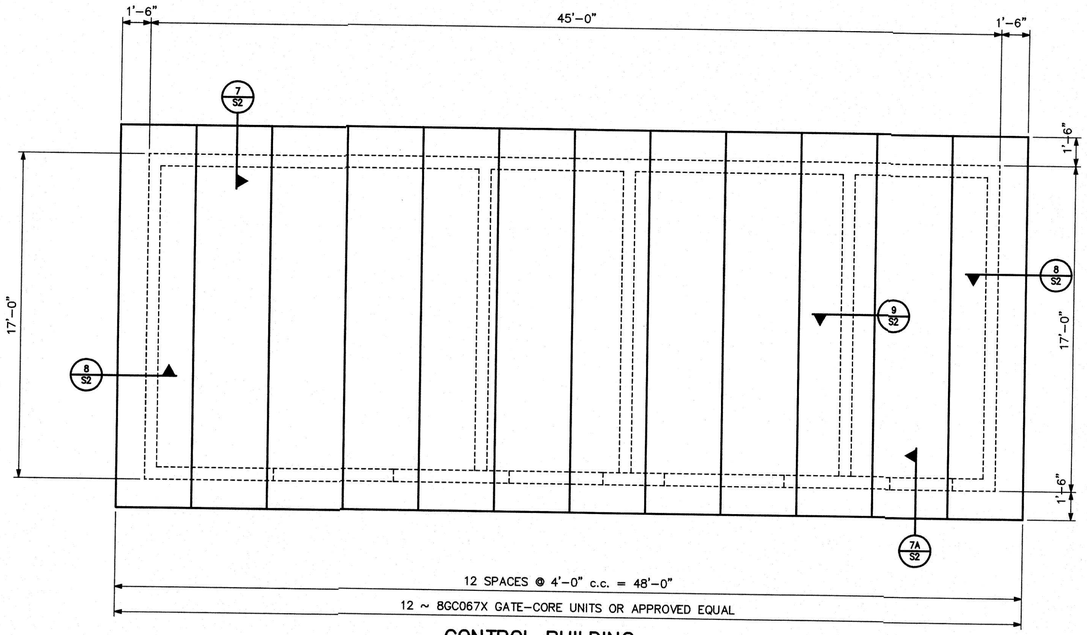

CONTROL BUILDING ROOF PLAN

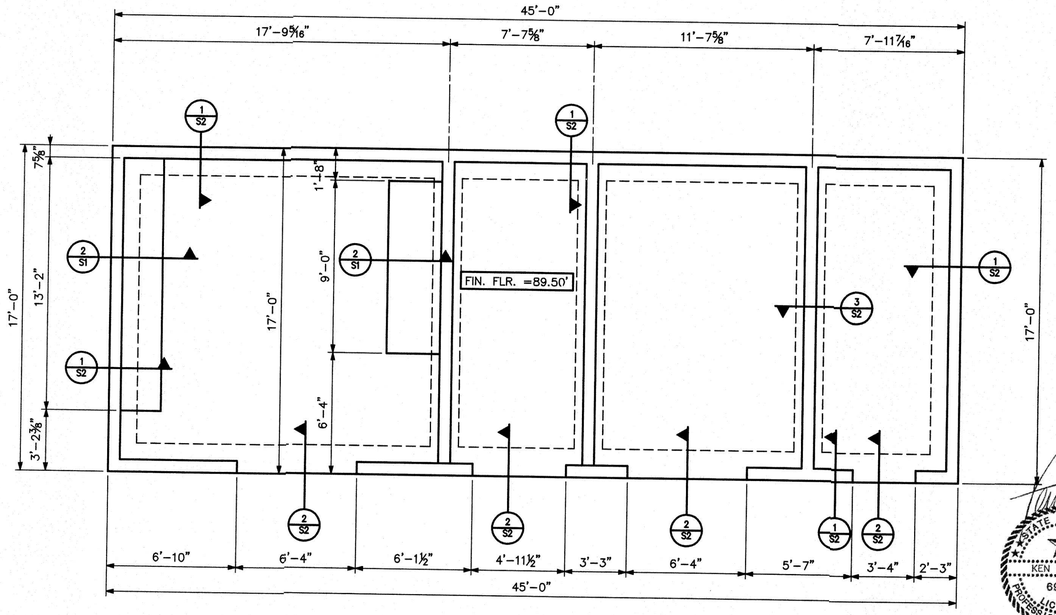

CONTROL BUILDING FOUNDATION PLAN

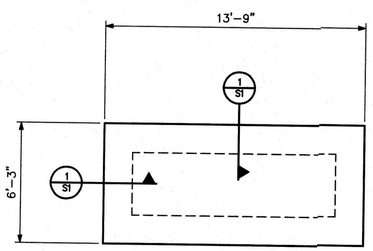

GENERATOR PAD

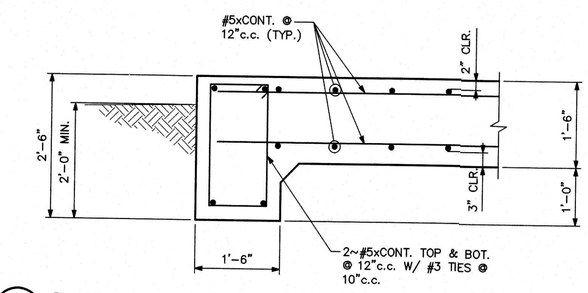

1 / S1 Section
SCALE: 3/4"=1'-0"

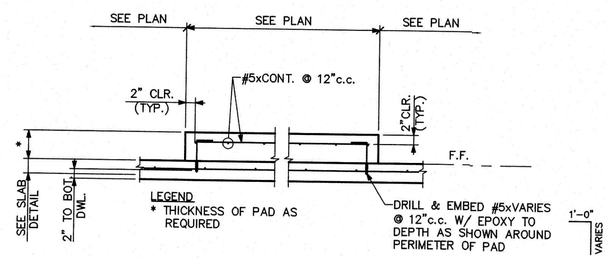

2 / S1 Section
3/4"=1'-0"

SLAB NOTE

6" CONC. SLAB ON 10 MIL POLY FILM ON 2" MAX. SAND FILL. REINFORCE WITH #4 @ 18"c.c. IN CENTER OF SLAB. REMOVE TOP 2 FEET OF GRADE AND REPLACE WITH SELECT FILL. FOR SUBGRADE PREPARATION REFER TO GEOTECHNICAL INVESTIGATION BY NINYO & MOORE, REPORT NO.700329045 DATED DECEMBER 2017.

GENERAL NOTES

1. ALL CONCRETE SHALL TEST 4000 PSI AT 28 DAYS.
2. ALL CONCRETE REINFORCING BARS SHALL CONFORM TO ASTM A615 GRADE 60.
3. DETAILING AND FABRICATION OF CONCRETE REINFORCEMENT AND ACCESSORIES SHALL BE IN ACCORDANCE WITH ACI-315 LATEST EDITION.
4. LAP ALL CONTINUOUS REINFORCING BARS 50 DIAMETERS AT SPLICES, TEES, AND CORNERS.
5. THE USE OF HEAT TO FACILITATE THE BENDING OF REINFORCING BARS WILL NOT BE PERMITTED.
6. NO ENGINEERING DRAWING MAY BE REPRODUCED FOR USE AS SHOP DRAWINGS.
7. FOR SUBGRADE AND FOUNDATION PREPARATION, REMOVE 2 FEET OF EXISTING SOIL AND REPLACE WITH SELECT FILL COMPACTED TO 95% STANDARD PROCTOR. REFER TO GEOTECHNICAL INVESTIGATION BY NINYO & MOORE, REPORT NO. 700329045 DATED DECEMBER 2017.

STATE OF TEXAS
KEN STANLEY
69701
LICENSED PROFESSIONAL ENGINEER
2/22/18

STANLEY SPURLING & HAMILTON, INC.
Consulting Engineering Services
T.B.P.E. REGISTRATION # F-000175
3301 Edloe Street, Suite 200 Houston, Texas 77027
Phone 713-776-9433 Fax 713-776-2439
E-MAIL: INFO@SSHINC.NET

0010-1219

NO.	DATE		APP.

FORT BEND COUNTY M.U.D. NO. 134E
FORT BEND COUNTY, TEXAS

JONES | CARTER
Texas Board of Professional Engineers Registration No. F-439
6330 West Loop South, Suite 150 • Bellaire, TX 77401 • 713.777.5337

HARVEST GREEN
WATER PLANT NO.1

CONTROL BUILDING & GENERATOR PLANS AND SECTIONS

NOTE: CITY SIGNATURES VALID FOR ONE YEAR ONLY AFTER DATE OF SIGNATURES

CITY OF HOUSTON
DEPARTMENT OF PUBLIC WORKS AND ENGINEERING

WATER	TRAFFIC & TRANSPORTATION
WASTEWATER	STORM WATER QUALITY
STORM	FACILITIES
STREET & BRIDGE	

FILE NO: 0010-1219 S1.DWG
JOB NO: 13889-0002-00

FOR CITY OF HOUSTON USE ONLY
CITY DWG NO.

DATE: FEBRUARY 2018
DGN. BY: RP
DWG. BY: SS

SCALE: AS NOTED

S1

SHEET No. 23 OF 47

CONFORMED DOCUMENTS

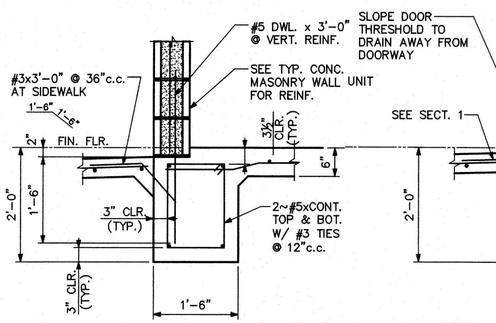

1 S1 Section
SCALE: 3/4"=1'-0"

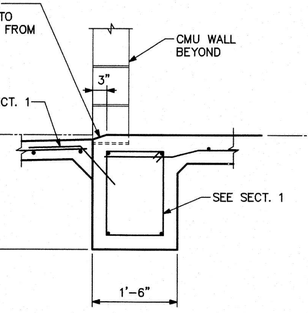

2 S1 Section
SCALE: 3/4"=1'-0"

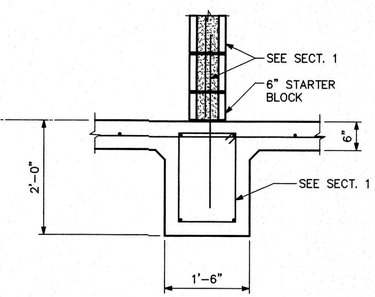

3 S1 Section
SCALE: 3/4"=1'-0"

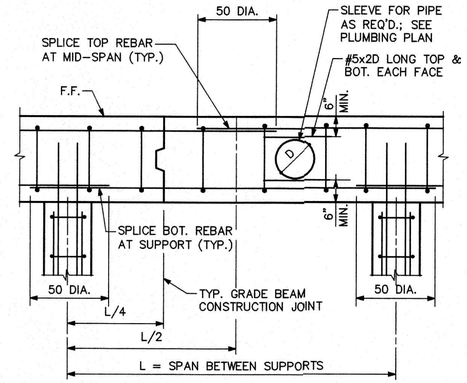

4 S2 Section
SCALE: 3/4"=1'-0"

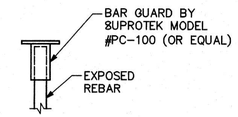

CONTRACTOR SHALL COVER ALL EXPOSED REBAR DURING CONSTRUCTION.

6 S2 Typical Rebar Cap Detail
SCALE: 3/4"=1'-0"

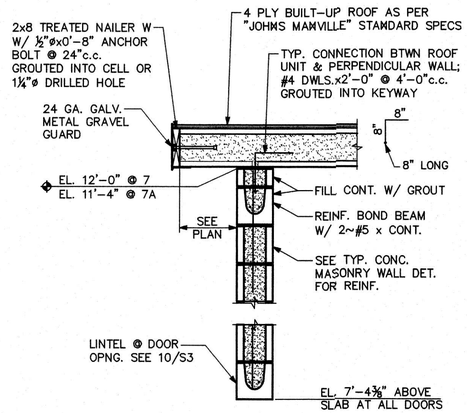

7 S1 7A S1 Section
SCALE: 3/4"=1'-0"

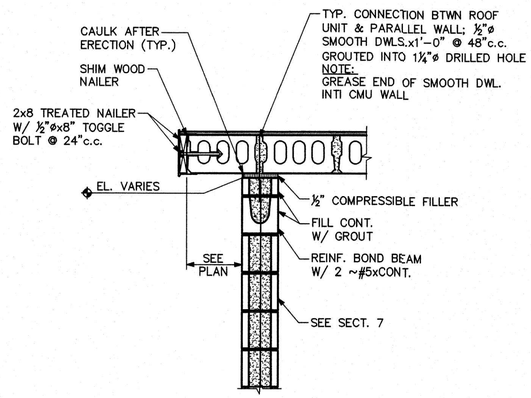

8 S1 Section
SCALE: 3/4"=1'-0"

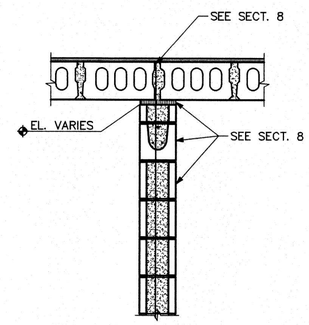

9 S1 Section
SCALE: 3/4"=1'-0"

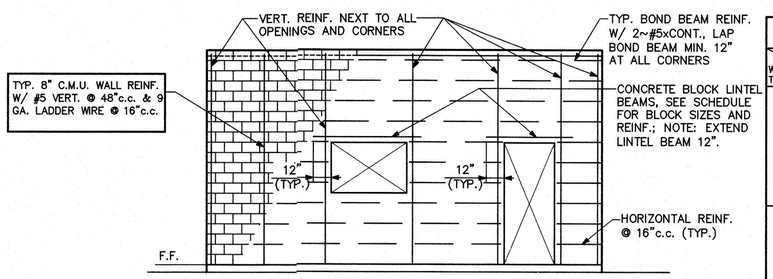

MIN. REBAR LAP SCHEDULE FOR f'm = 1,500 psi

BAR SIZE	6" CMU	8" CMU	10" CMU	12" CMU
#3	12"	12"	12"	12"
#4	20"	15"	12"	12"
#5	32"	23"	18"	15"
#6	54"	43"	34"	28"
#7	NA	60"	46"	38"
#8	NA	72"	71"	57"
#9	NA	NA	82"	74"

CONCRETE MASONRY NOTES

1. CONCRETE MASONRY UNITS AND CONSTRUCTION TO BE PER "NATIONAL CONCRETE MASONRY ASSOCIATION" RECOMMENDATIONS (WHERE NOT COVERED BY THE LOCAL BUILDING CODE).
2. ALL MASONRY GROUT TO BE PER TABLE 1 (THIS SHEET); ALL MORTAR PER TABLE 2 (THIS SHEET).
3. FILL CELLS WITH GROUT AT VERTICAL REINFORCEMENT.
4. CAST-IN-ANCHORS EMBEDDED IN CONCRETE MASONRY SHALL EXTEND BEYOND REINFORCING 1" MIN.
5. COMPRESSIVE STRENGTH OF MASONRY SHALL BE 1500 PSI AT 28 DAYS.
6. CMU SHALL BE PLACED IN A RUNNING BOND PATTERN UNLESS SPECIFICALLY NOTED OTHERWISE ON THE PLANS.

CONCRETE BLOCK LINTEL SCHEDULE

WALL THICKNESS \ MAXIMUM SPAN	4'-6"	9'-0"
4"	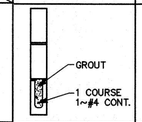	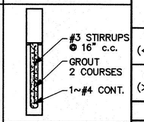
6" & 8" & 12"	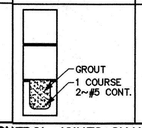	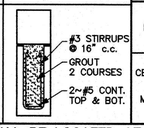

TABLE 1. GROUT PROPORTIONS BY VOLUME

TYPE	PARTS BY VOLUME OF PORTLAND CEMENT OR PORTLAND BLAST-FURNACE SLAG CEMENT	PARTS BY VOLUME OF HYDRATED LIME OR LIME PUTTY	AGGREGATE MEASURED IN DAMP, LOOSE CONDITION	
			FINE	COARSE
FINE GROUT (<4" WIDE CAVITY)	1	0 TO 1/10	2¼ TO 3 TIMES THE SUM OF THE VOLUMES OF THE CEMENTITIOUS MATERIAL	
COARSE GROUT (>4" WIDE CAVITY)	1	0 TO 1/10	2¼ TO 3 TIMES THE SUM OF THE VOLUMES OF THE CEMENTITIOUS MATERIAL	1 TO 2 TIMES THE SUM OF THE VOLUMES OF THE CEMENTITIOUS MATERIAL

TABLE 2. MORTAR PROPORTIONS BY VOLUME

MATERIAL	TYPE	PORTLAND CEMENT OR BLENDED CEMENT	MASONRY CEMENT	HYDRATED LIME OR LIME PUTTY	AGGREGATE RATIO (MEASURE IN DAMP, LOOSE CONDITION)
CEMENT LIME	S	1	....	OVER ¼ TO ½	NOT LESS THAN 2¼ & NOT MORE THAN 3 TIMES THE SUM OF THE SEPARATE VOLUMES OF CEMENTITIOUS MATERIALS
MASONRY/ CEMENT	S	1/2	1	....	

NOTE: CONTROL JOINTS SHALL BE LOCATED AT THE FOLLOWING

1. AT ALL CHANGES IN WALL HEIGHT.
2. AT ALL CHANGES IN WALL THICKNESS SUCH AS CHASES, COLUMNS OR PILASTERS.
3. AT (ABOVE) MOVEMENT JOINTS IN FOUNDATIONS AND FLOORS.
4. AT (BELOW) MOVEMENT JOINTS IN ROOFS AND FLOORS THAT BEAR ON A WALL.
5. ADJACENT TO CORNERS OF WALLS OR INTERSECTIONS WITHIN A DISTANCE OF ONE-HALF THE NORMAL CONTROL JOINT SPACING.
6. CONTROL JOINTS SHALL BE SPACED NO MORE THAN 25'-0" APART.

LOOSE LINTEL SCHEDULE

SPAN	LINTEL	SPAN	LINTEL
0' TO 6'	L3½x3½x¼	8' TO 9'	L5x3½x5/16
6' TO 7'	L4x3½"x¼	9' TO 10'	L6x3½x5/16
7' TO 8'	L4x3½x5/16	10' TO 12'	L7x4x⅜

LOOSE LINTEL MIN. BEARING OF 8".

10 S2 TYPICAL ELEVATION OF CONCRETE MASONRY WALL AND NOTES
N.T.S.

STATE OF TEXAS
KEN STANLEY
69701
LICENSED PROFESSIONAL ENGINEER
2-2-18

STANLEY SPURLING & HAMILTON, INC.
Consulting Engineering Services
T.B.P.E. REGISTRATION # F-000175
3301 Edloe Street, Suite 200 Houston, Texas 77027
Phone 713-776-9433 Fax 713-776-2439
E-MAIL: INFO@SSHINC.NET

0010-1219

NO.	DATE		APP.

FORT BEND COUNTY M.U.D. NO. 134E
FORT BEND COUNTY, TEXAS

JONES | CARTER
Texas Board of Professional Engineers Registration No. F-439
6330 West Loop South, Suite 150 • Bellaire, TX 77401 • 713.777.5337

HARVEST GREEN
WATER PLANT NO.1

CONTROL BUILDING STRUCTURAL SECTIONS

NOTE: CITY SIGNATURES VALID FOR ONE YEAR ONLY AFTER DATE OF SIGNATURES

CITY OF HOUSTON
DEPARTMENT OF PUBLIC WORKS AND ENGINEERING

WATER	TRAFFIC & TRANSPORTATION
WASTEWATER	STORM WATER QUALITY
STORM	FACILITIES
STREET & BRIDGE	

FILE NO. 0010-1219 S2.DWG
JOB NO: 13889-0002-00

FOR CITY OF HOUSTON USE ONLY
CITY DWG NO.

DATE: FEBRUARY 2018
DGN. BY: RP
DWG. BY: SS
SCALE: AS NOTED

S2

SHEET No. 24 OF 47

CONFORMED DOCUMENTS

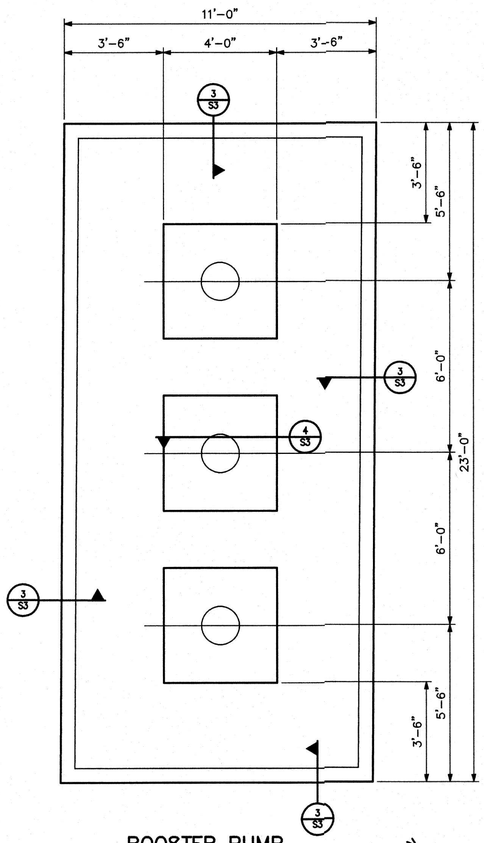

BOOSTER PUMP FOUNDATION PLAN
3/8"=1'-0"

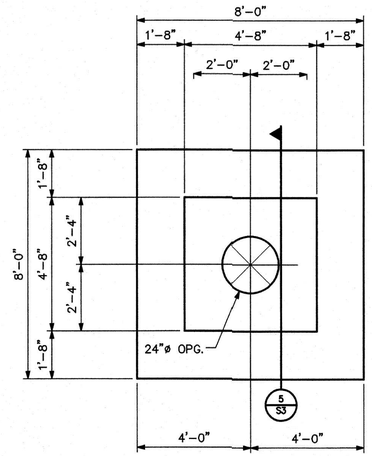

WATER WELL PLAN
3/8"=1'-0"

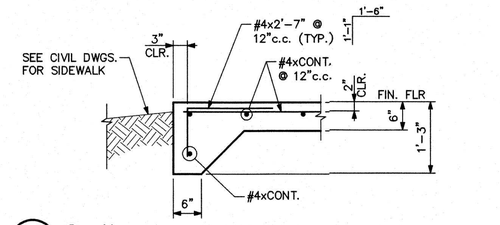

3/S3 Section
3/4"=1'-0"

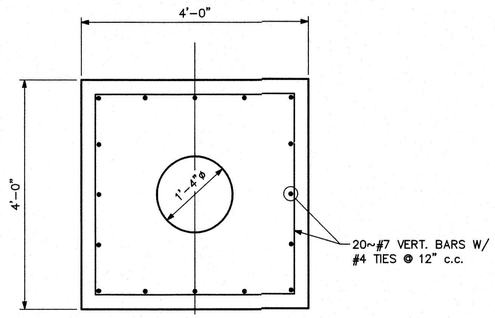

PLAN VIEW

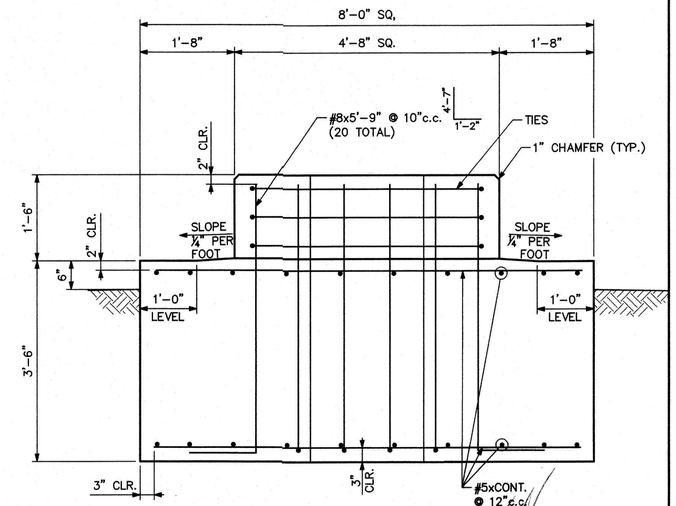

5/S3 Section
3/4"=1'-0"

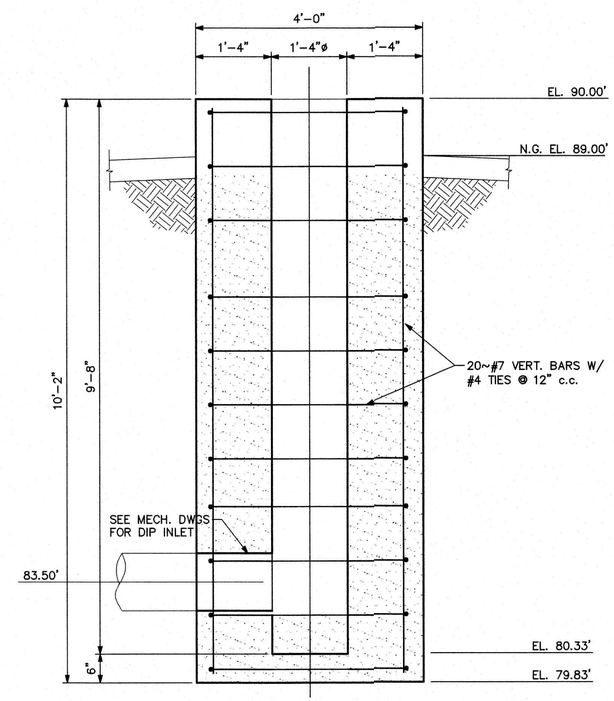

ELEVATION VIEW

4/S3 Section
3/4"=1'-0"

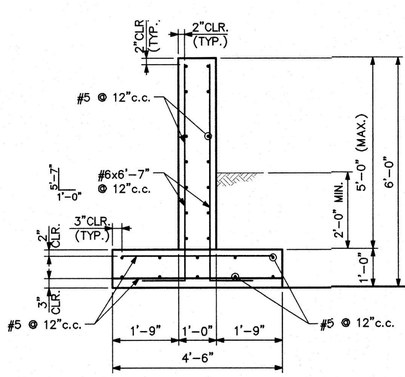

1/S3 Section @ 20,000 Gallon Hydropneumatic Tank 1/2"=1'-0"

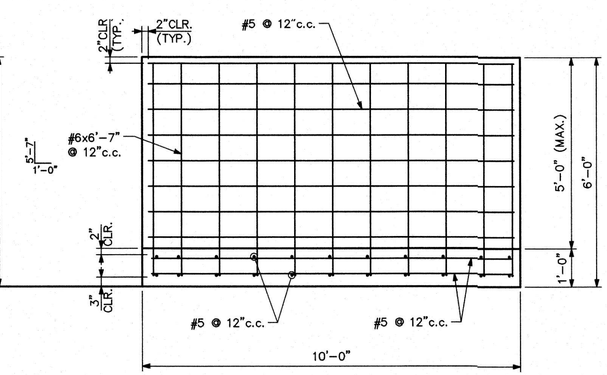

2/S3 Section @ 20,000 Gallon Hydropneumatic Tank 1/2"=1'-0"

NOTE:
SEE SHEET S1 FOR GENERAL NOTES

STATE OF TEXAS
KEN STANLEY
69701
LICENSED PROFESSIONAL ENGINEER
2/22/18

STANLEY SPURLING & HAMILTON, INC.
Consulting Engineering Services
T.B.P.E. REGISTRATION # F-000175
3301 Edloe Street, Suite 200 Houston, Texas 77027
Phone 713-776-9433 Fax 713-776-2439
E-MAIL: INFO@SSHINC.NET 0010-1219

NO.	DATE		APP.

FORT BEND COUNTY M.U.D. NO. 134E
FORT BEND COUNTY, TEXAS

JONES | CARTER
Texas Board of Professional Engineers Registration No. F-439
6330 West Loop South, Suite 150 • Bellaire, TX 77401 • 713.777.5337

HARVEST GREEN
WATER PLANT NO.1

BOOSTER PUMP, HPT AND WATER WELL PLANS AND SECTIONS

NOTE: CITY SIGNATURES VALID FOR ONE YEAR ONLY AFTER DATE OF SIGNATURES

CITY OF HOUSTON
DEPARTMENT OF PUBLIC WORKS AND ENGINEERING

WATER	TRAFFIC & TRANSPORTATION
WASTEWATER	STORM WATER QUALITY
STORM	FACILITIES
STREET & BRIDGE	

FILE NO. 0010-1219 S3.DWG
JOB NO: 13889-0002-00
DATE: FEBRUARY 2018
DGN. BY: RP
DWG. BY: SS
SCALE: AS NOTED

FOR CITY OF HOUSTON USE ONLY
CITY DWG NO.

S3

SHEET No. 25 OF 47

SHEET NO. OF

2/21/2018 3:40 PM \\0001\DRDATA\0010\1219\13889-0002-00\DWG\BOOSTER PUMP FND PLAN S3.DWG

ORIGINAL SCALE IN INCHES FOR REDUCED PLANS

CONFORMED DOCUMENTS

ELECTRICAL PLAN SHEET SYMBOLS

SYMBOL	DESCRIPTION
A	LIGHT FIXTURE (LETTER INDICATES TYPE PER SCHEDULE)
A	SINGLE SPECIAL PURPOSE RECEPTACLE (LETTER INDICATES TYPE PER SCHEDULE)
	TELEPHONE UTILITY SYSTEM OUTLET
	CLASS 1, DIV I, CONDUIT SEAL
WP	RECEPTACLE, WP INDICATES A WET PROOF LOCATION COVER. NEMA 3R, UNLESS OTHERWISE INDICATED.
	UNFUSED SAFETY SWITCH – WP, 3P, 30A, 600V, NEMA 3R, UNLESS OTHERWISE INDICATED.
30	FUSED SAFETY SWITCH – 3P, 600V, 30A MINIMUM, NEMA 3R OR AS REQUIRED TO ACCOMMODATE FUSE SIZE INDICATED
	COMBINATION PROTECTIVE DEVICE & MAGNETIC STARTER
	SINGLE UNIT PUSHBUTTON STATION
	2–UNIT PUSHBUTTON STATION
	ON/OFF SELECTOR SWITCH
S	"START/STOP" SELECTOR SWITCH
	AIR TERMINAL
	FLEX CONDUIT
	EXPOSED PUMP CABLE
	CONDUIT CONCEALED IN FLOOR SLAB OR UNDER FLOOR SLAB. (CONDUITS 1–1/2" OR LARGER SHALL BE INSTALLED UNDER FLOOR SLAB). CONDUITS RUN UNDER FLOOR SLAB SHALL BE ENCASED IN CONCRETE. SEE NOTE 2
	HOMERUN TO PANEL OR MCC AS NOTED
A EQ	CONCRETE ENCASED DUCTBANK (SECTION INDICATES CONDUIT CONFIGURATION & DESIGNATIONS)
	LIGHTING PANEL
	UTILITY METERING CABINET
	TELEPHONE UTILITY SYSTEM BACKBOARD
	DISTRIBUTION PANEL
	CABINET OR PULL BOX
	EXISTING
	PROPOSED
	DEMOLITION WORK ITEMS

SYMBOL	DESCRIPTION
FS	FLOAT SWITCH
S	SOLENOID VALVE
T	ELECTRIC THERMOSTAT
T	TEMPERATURE ACTUATED DEVICE
$	SINGLE POLE TOGGLE SWITCH
$2	DOUBLE POLE TOGGLE SWITCH
$3	3 – WAY SWITCH
$T	MANUAL ROTARY TIMER LIGHT SWITCH
$WP	SINGLE POLE TOGGLE SWITCH, WP INDICATES WEATHERPROOF COVER
J	JUNCTION BOX
	EXPOSED CONDUIT
	UNDERGROUND CONDUIT
G	BARE STRANDED GROUND CONDUCTOR
G	GROUND CONDUCTOR UNDERGROUND
T	TELEPHONE CONDUCTORS
E	EMPTY CONDUIT
	CAPPED CONDUIT
OH	POWER COMPANY OVERHEAD POLE LINE
LS	LIMIT SWITCH
FS	FLOW SWITCH
PS	PRESSURE SWITCH
TS	TORQUE SWITCH
PE	PNUEMATIC/ELECTRIC SWITCH
PLS	PROXIMITY LIMIT SWITCH
DS	MAGNETIC REED DOOR SWITCH
T	TRANSFORMER
	DEVICE AS DESIGNATED
	EXISTING POWER COMPANY POLE
	PROPOSED POWER COMPANY POLE
XXX	CONDUIT/CONDUCTOR TAGS

CONTROL DIAGRAM SYMBOL LEGEND

SYMBOL	DESCRIPTION
CR	CONTROL RELAY
TD	TIME DELAY RELAY
R	LED TYPE PILOT LIGHT PUSH–TO–TEST W–WHITE; R–RED; G–GREEN TEST WIRING NOT SHOWN FOR CLARITY
	THERMOSTAT
TD o–o–x	TIME DELAY CONTACT (o=OPEN, X=CLOSED, DESIGNATION INDICATES CONTACT POSITION WHEN RELAY IS RESET–TIMING–TIMED OUT)
	SPACE HEATER
TD1 NO–TC	CONTACT ON TIME DELAY RELAY TIME DELAY CLOSED AFTER ENERGIZATION
OFF–ON	ON–OFF SWITCH, 2 POSITION TOGGLE
	PUSHBUTTON, NORMALLY CLOSED
	PUSHBUTTON, NORMALLY OPEN
	SELECTOR SWITCH
	CONTROL STATION/DISCONNECT SWITCH
	MOMENTARY RESET PUSHBUTTON
M	AUXILIARY STARTER CONTACTS
	PRESSURE SWITCH, OPENS ON RISE
	PRESSURE SWITCH, CLOSES ON RISE
	LEVEL OR LEAK DETECTION SWITCH
	LIMIT SWITCH, NORMALLY CLOSED
	LIMIT SWITCH, NORMALLY OPEN
	LIMIT SWITCH, NORMALLY OPEN, HELD CLOSED
	LIMIT SWITCH, NORMALLY CLOSED, HELD OPEN
	TEMPERATURE ACTUATED SWITCH, OPENS ON RISE
	TEMPERATURE ACTUATED SWITCH, CLOSES ON RISE
	POWER FACTOR CORRECTION CAPACITOR

SYMBOL	DESCRIPTION
	HOLDING COIL CONTACT (NORMALLY OPEN–NORMALLY CLOSED)
CR CR	CONTROL RELAY CONTACT (NORMALLY OPEN–NORMALLY CLOSED)
F	FLOAT SWITCH
PE	PHOTOELECTRIC SWITCH
B	BELL
ETM	ELASPED TIME METER
	CONTROL POWER TRANSFORMER
M	MOTOR STARTER OPERATING COIL
A	LIGHT FIXTURE, A = TYPE
	MOTOR CONTROL STATION
	HAND–OFF–AUTO SELECTOR SWITCH
SC	SURGE CAPACITOR
	SURGE ARRESTER
	CONDUIT STUB UP
H A O H O A	HAND SELECTOR SWITCH
	FUSE
	SOLENOID VALVE
	SPACE HEATER
OL'S X2	OVERLOADS
	GROUND CONNECTION
R	PUSH–TO–TEST INDICATING LIGHT

ONE–LINE DIAGRAM LEGEND

SYMBOL	DESCRIPTION
	MOLDED CASE CIRCUIT BREAKER
	COMBINATION "MCP" MOTOR STARTER
PFR	PHASE FAILURE RELAY
	SPACE HEATER
F	EXHAUST FAN
G	INDICATING LIGHT (COLOR NOTED)
3/4	3 PHASE MOTOR (HORSEPOWER NOTED)
SPD	SURGE PROTECTIVE DEVICE
	SYSTEM GROUND
	SERVICE HEAD
	TRANSFORMER
	CURRENT TRANSFORMER
	FUSE
	POWER FACTOR CORRECTION CAPACITOR
M	SERVICE METER
3	CONTROL CONTACT, 3 = NEMA STARTER SIZE
PM	3 PHASE POWER MONITOR (SINGLE PHASE PROTECTION RELAY)
3 OL'S M	NEMA STANDARD MAGNETIC MOTOR STARTER OPERATING COIL

SYMBOL	DESCRIPTION
LS	LOCK–STOP STATION (MAINTAINED CONTACT)
HOA	HAND–OFF–AUTO SWITCH
ETM	ELAPSED TIME METER
MS	MOISTURE SENSOR
NG	NEUTRAL/GROUND PAD
TS	TEMPERATURE SENSOR IN MOTOR
GB	GROUND BUS
IC	MICRO–SWITCH – STARTER DISCONNECT TO PREVENT CONTROL OPERATION WHEN MOTOR IS DE–ENERGIZED
RVSS	REDUCED VOLTAGE SOFT STARTER W/INTERNAL BYPASS CONTACTOR
FS	FLOAT SWITCH
	FUSED SWITCH
R	LED TYPE PILOT LIGHT PUSH–TO–TEST W–WHITE; R–RED; G–GREEN TEST WIRING NOT SHOWN FOR CLARITY
MCP	MOTOR CIRCUIT PROTECTOR
	THERMAL OVERLOAD
	AUTOMATIC SWITCH

ABBREVIATIONS

A --- AMP
ADJ --- ADJUSTABLE
AFF --- ABOVE FINISHED FLOOR
AI --- ANALOG INPUT
ALT --- ALTERNATOR
AO --- ANALOG OUTPUT
ATS --- AUTOMATIC TRANSFER SWITCH
C --- CONDUIT
CA --- CABLE
CAB --- CABINET
CAT. --- CATALOG
CB --- CIRCUIT BREAKER
CKT --- CIRCUIT
CNP --- CENTERPOINT POWER
COMM --- COMMUNICATIONS
CONT --- CONTINUED
CPT–N--- CONTROL POWER TRANSFORMER NEUTRAL
CPU --- CENTRAL PROCESSING UNIT
CT --- CURRENT TRANSFORMER
CU --- COPPER
CW --- COOL WHITE
DI --- DISCRETE INPUT
DIREC --- DIRECTIONAL
DIV --- DIVISION
DN --- DOWN
DO --- DISCRETE OUTPUT
ETM --- ELAPSED TIME METER
G.E. --- GENERAL ELECTRIC
GFI --- GROUND FAULT INTERRUPT
GND --- GROUND
HL&P --- HOUSTON LIGHTING & POWER
H–O–A -- HAND OFF AUTO
HPS --- HIGH PRESSURE SODIUM
INC --- INCANDESCENT
JB --- JUNCTION BOX
KA SYM -- THOUSAND AMPS SYMMETRICAL
KS --- KEY SWITCH
KVA --- KILO–VOLT–AMPS
KW --- KILO–WATT
L --- LINE
LOS --- LOCK OUT STOP
LS --- LIMIT SWITCH
LSI --- LONG TIME, SHORT TIME, INSTANTANEOUS
LSIG --- LONG TIME, SHORT TIME, INSTANTANEOUS, GROUND FAULT
LV --- LOW VOLTAGE
LVN --- LOW VOLTAGE NEUTRAL
M --- MOTOR RUN CONTACT
MADC --- MILLIAMPERE DIRECT CURRENT
MCC --- MOTOR CONTROL CENTER
MCP --- MOTOR CIRCUIT PROTECTOR
MIN. --- MINUTES
MOR --- MOTOR OVERLOAD RELAY
mS --- MILLISECOND
MTH --- MOTOR TEMPERATURE SWITCH
MTS --- MANUAL TRANSFER SWITCH
N --- NEUTRAL
N3R --- NEMA 3R
N4X --- NEMA 4X
N.C. --- NORMALLY CLOSED
NEC --- NATIONAL ELECTRICAL CODE
NEUT --- NEUTRAL
N.O. --- NORMALLY OPEN
OL --- OVERLOAD
P --- POLE
PLC --- PROGRAMMABLE LOGIC CONTROLLER
POS --- POSITION
PS --- PRESSURE SWITCH
PVC --- POLYVINYL CHLORIDE
PVC RGS – PVC COATED RIGID GALV CONDUIT
PWR --- POWER
R --- RELAY
RALM --- PUMP ALARM RELAY
REE --- ELEC BLDG ENTRY AUX RELAY
RGS --- RIGID GALVANIZED CONDUIT
RHLA --- HIGH LEVEL ALARM RELAY
RM --- PUMP RUN AUX RELAY
RMOR --- MOTOR OVERLOAD AUX RELAY
RMTH --- MOTOR TEMPERATURE RELAY
RPLC --- PLC MODE AUX RELAY
RPLCOR -- PLC OVERRIDE
RPLM --- PLC PUMP RUN RELAY
RPLMP--- BACKUP SYSTEM RUN RELAY
RR --- RUN RELAY
RRST --- PUMP RESET AUX RELAY
RRST5 --- MODEM RESET RELAY
RTAH --- TEMPERATURE ALARM AUX RELAY
RUV --- UNDERVOLTAGE AUX RELAY
RVSS --- REDUCED VOLTAGE SOFT STARTER
RWD --- WATCHDOG RELAY
SEC --- SECONDS
SL --- SEAL LEAK SWITCH
SN --- SOLID NEUTRAL
SP --- SURGE PROTECTOR
SPD --- SURGE PROTECTION DEVICE
SPST --- SINGLE POLE SINGLE THROW
SS --- SELECTOR SWITCH
S.S. --- STAINLESS STEEL
SW --- SWITCH
TEMP --- TEMPERATURE
TD --- TIME DELAY RELAY
TDLP --- LOSS OF POWER TIME DELAY RELAY
TDRM --- PUMP TIME DELAY RELAY
TSP --- TWISTED SHIELDED PAIR
UPS --- UNINTERRUPTIBLE POWER SUPPLY
V --- VOLTS
VA --- VOLT–AMP
VAC --- VOLTS ALTERNATING CURRENT
VDC --- VOLTS DIRECT CURRENT
W --- WATT OR WIRE
WM --- WATT MISER (HIGH EFFICIENCY LAMP)
WP --- WEATHER PROOF
XFMR --- TRANSFORMER

NOTES:

1. All construction shall comply with local and national codes and requirements.
2. Conduits shall not be routed across walkways, paths of access, travel, or egress. Route beneath gratings, in concrete structures, or around equipment. Do not route in conflict with other piping, conduits, equipment, or structures. Conduits imbedded in structural concrete (floor slabs, ETC.) shall be so located as not to unduly impair the strength of the construction and shall be spaced not less than two times the conduit OD between adjacent conduits except where crossing or otherwise approved by the engineer.
3. Field verify exact location of all underground pipes, conduits, and structures before digging. Repair any damage done to original condition.
4. Contractor shall be responsible for obtaining any and all permits associated with the work. The costs of the permits, if any, shall be borne by the Contractor.
5. This contract includes field installation and completion of vendor supplied components. All solenoids, float switches, transducers, motor operated valves, drive motors, alarm contacts, run lights, etc. are to be wired to vendor's panel or site motor controls as required. Contractor is to verify vendor–supplied components and provide a complete and operable system.
6. All exterior above grade conduit, duct bank elbows, and risers are to be PVC coated rigid galvanized steel conduit. Conduits within the Chemical Building are to be schedule 80 PVC. All conduits in duct banks shall be schedule 40 PVC. All mounting hardware to be stainless steel.
7. The cost of connecting new service shall be provided by the Owner. Contractor shall provide and install all necessary slabs, conduits, conductors, fittings, and other equipment necessary to energize the plant. Installation shall meet all utility company requirements, local and national codes. Review this project's service requirements of location, ratings, and methods with power company prior to beginning construction. Contractor shall coordinate all service requirements with CenterPoint Energy. Notify the Plant Operator and the Jones & Carter, Inc. Construction Department (713–777–5337) a minimum of one week in advance of any scheduled power outage(s).
8. Items in bold are proposed, all others are existing.
9. Repair all damage to existing roads and sidewalks related to this construction to pre–existing conditions or better.
10. Any proposed underground duct banks crossing existing duct banks and pipes shall be routed underneath existing obstruction.
11. Support all outdoor above ground conduit every 6 ft w/stainless steel mounting hardware.
12. Wiring for lighting, receptacles and other miscellaneous circuits shall conform to the circuiting indicated on the drawings with arrangement and routing as required. The wiring shall be so arranged that no more than 4 current carrying conductors shall be installed per conduit and and circuits of different panels shall be installed in separate raceways.
13. Any conduit without further designation indicates 3–#10 and 1–#12 GND in 1" conduit.

APPROVED: K.M.C. DEVELOPMENT COORDINATOR

DATE: 5/21/18

NO.	DATE	REVISIONS	APP.
1	05/30/18	ISSUED FOR CONSTRUCTION	BSC

FORT BEND COUNTY M.U.D. No. 134E
FORT BEND COUNTY, TEXAS

JONES | CARTER
Texas Board of Professional Engineers Registration No. F-439
6330 West Loop South, Suite 150 • Bellaire, TX 77401 • 713.777.5337

HARVEST GREEN
WATER PLANT No. 1

ELECTRICAL LEGENDS & SCHEDULES

NOTE: CITY SIGNATURES VALID FOR ONE YEAR ONLY AFTER DATE OF SIGNATURES

CITY OF HOUSTON
DEPARTMENT OF PUBLIC WORKS AND ENGINEERING

WATER	4/12/18	TRAFFIC & TRANSPORTATION	
WASTEWATER	4/12/18	STORM WATER QUALITY	
STORM	4/12/18	FACILITIES	04/12/18
STREET & BRIDGE			

4-12-18

STATE OF TEXAS
BRIAN S. CHONG
108528
LICENSED PROFESSIONAL ENGINEER

FILE NO:
JOB NO: 13889–0002–00

DATE: April 2018
DGN. BY: KADOMINGUEZ
DWG. BY: JASTRUHAR

SCALE: NO SCALE

E1
SHEET No. 26 OF 47

FOR CITY OF HOUSTON USE ONLY
CITY DWG NO.

PUBLIC WORKS AND ENGINEERING
APPROVED
60306
CITY DRAWING NUMBER
HOUSTON, TEXAS

K:\13889\13889–0002–00 Water Plant No. 1\2 Design Phase\CAD\Plans\Archive\Conformed Dwgs\ELEC.dwg May 30,2018 – 2:53pm jrb

C.O.H. LOG No. 18–0447

COH BLK REV. JAN 2006

ORIGINAL SCALE IN INCHES FOR REDUCED PLANS

CONFORMED DOCUMENTS

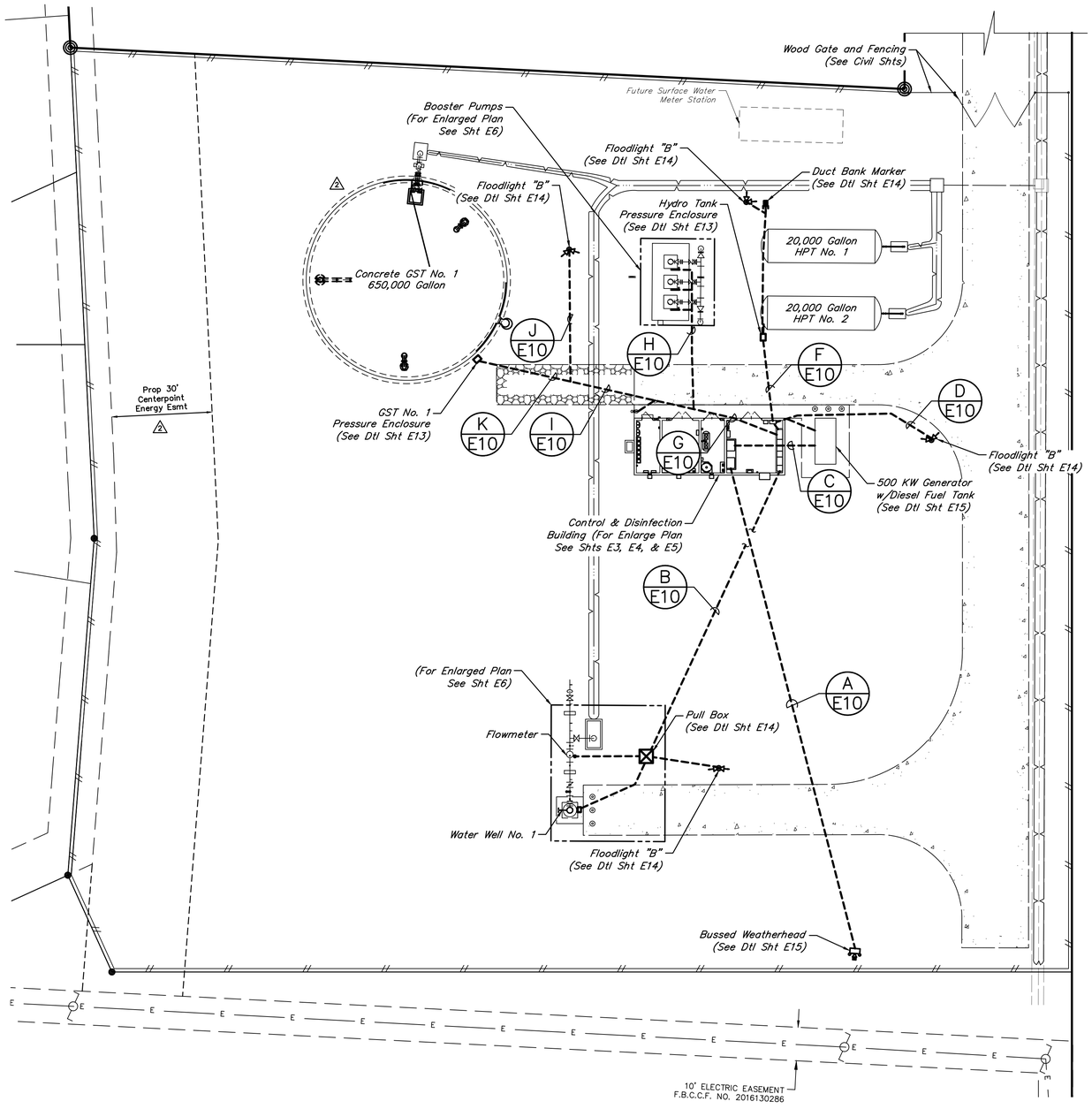

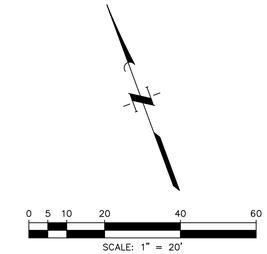

APPROVED: E.C.C. DEVELOPMENT COORDINATOR

DATE: 5/21/18

NO.	DATE	REVISIONS	APP.
2	05/31/18	REVISED PER GST RELOCATION	BSC
1	05/30/18	ISSUED FOR CONSTRUCTION	BSC

FORT BEND COUNTY M.U.D. No. 134E
FORT BEND COUNTY, TEXAS

JONES | CARTER
Texas Board of Professional Engineers Registration No. F-439
6330 West Loop South, Suite 150 • Bellaire, TX 77401 • 713.777.5337

HARVEST GREEN
WATER PLANT No. 1

ELECTRICAL SITE LAYOUT

NOTE: CITY SIGNATURES VALID FOR ONE YEAR ONLY AFTER DATE OF SIGNATURES

CITY OF HOUSTON
DEPARTMENT OF PUBLIC WORKS AND ENGINEERING

WATER | TRAFFIC & TRANSPORTATION
WASTEWATER | STORM WATER QUALITY
STORM | FACILITIES
STREET & DRAINAGE

FILE NO:
JOB NO: 13889-0002-00

DATE: April 2018
DGN. BY: KADOMINGUEZ
DWG. BY: JASTRUHAR

SCALE: 1:20

E2
SHEET No. 27 OF 47

FOR CITY OF HOUSTON USE ONLY
CITY DWG NO.

60306

4-12-18

STATE OF TEXAS
BRIAN S. CHONG
108528
LICENSED PROFESSIONAL ENGINEER

K:\13889\13889-0002-00 Water Plant No. 1\2 Design Phase\CAD\Plans\Archive\Conformed Dwgs\ELEC.dwg May 31,2018 - 9:48am jrb

C.O.H. LOG No. 18-0447

COH BLK REV. JAN 2006

ORIGINAL SCALE IN INCHES FOR REDUCED PLANS

CONFORMED DOCUMENTS

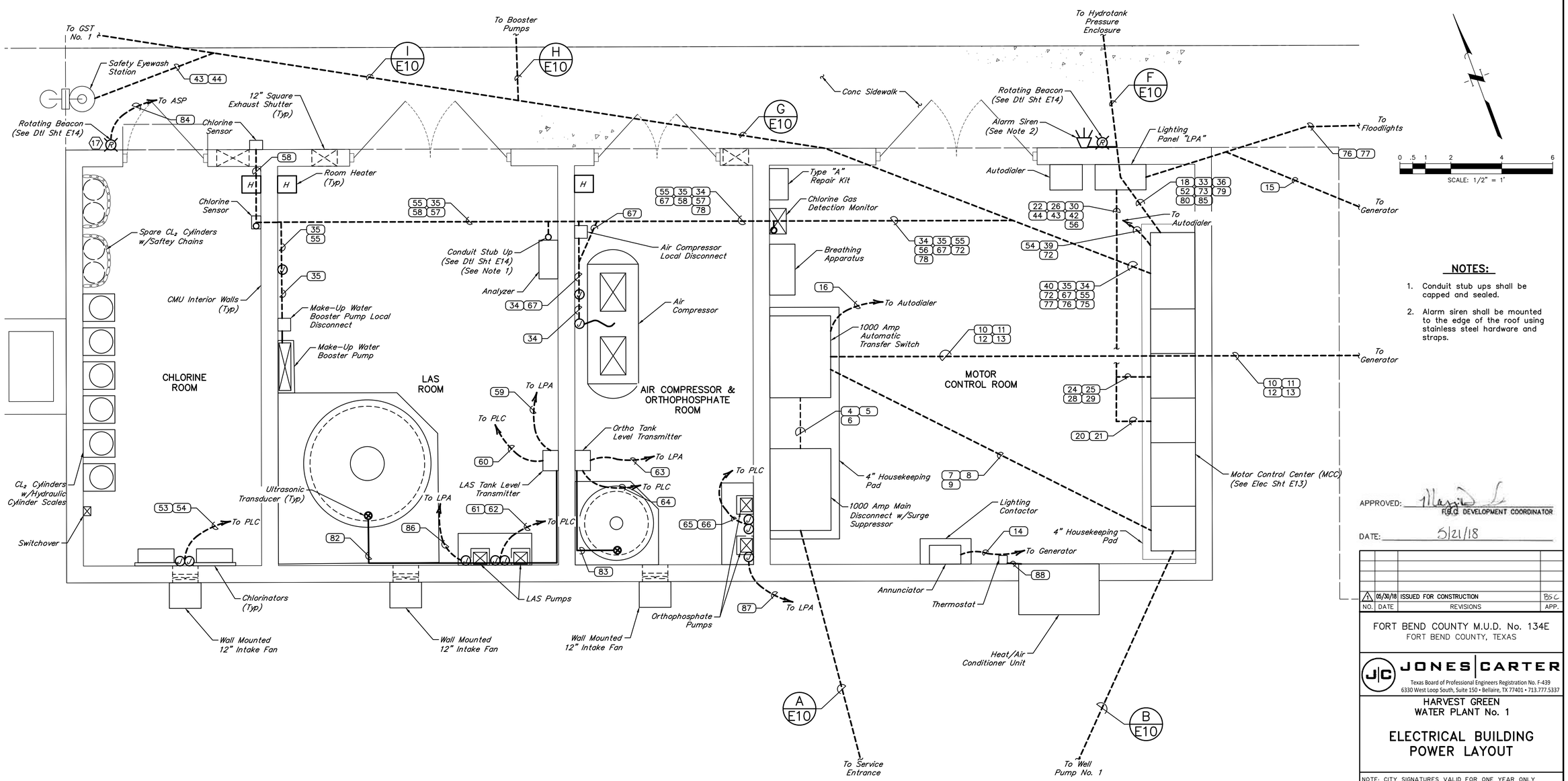

NOTES:

1. Conduit stub ups shall be capped and sealed.
2. Alarm siren shall be mounted to the edge of the roof using stainless steel hardware and straps.

CONTROL BUILDING POWER LAYOUT

SCALE: 1/2" = 1'-0"

APPROVED: F.B.C. DEVELOPMENT COORDINATOR

DATE: 5/21/18

NO.	DATE	REVISIONS	APP.
1	05/30/18	ISSUED FOR CONSTRUCTION	BSC

FORT BEND COUNTY M.U.D. No. 134E
FORT BEND COUNTY, TEXAS

JONES | CARTER
Texas Board of Professional Engineers Registration No. F-439
6330 West Loop South, Suite 150 • Bellaire, TX 77401 • 713.777.5337

HARVEST GREEN
WATER PLANT No. 1

ELECTRICAL BUILDING POWER LAYOUT

NOTE: CITY SIGNATURES VALID FOR ONE YEAR ONLY AFTER DATE OF SIGNATURES

CITY OF HOUSTON
DEPARTMENT OF PUBLIC WORKS AND ENGINEERING

WATER 04/12/18	TRAFFIC & TRANSPORTATION
WASTEWATER 4/12/18	STORM WATER QUALITY
STORM 4-12-18	FACILITIES 04/12/18
STREET & BRIDGE	

FILE NO:
JOB NO: 13889-0002-00

DATE: April 2018
DGN. BY: KADOMINGUEZ
DWG. BY: JASTRUHAR

SCALE: AS SHOWN

E3
SHEET No. 28 OF 47

FOR CITY OF HOUSTON USE ONLY
CITY DWG NO.

60306

4-12-18
STATE OF TEXAS
BRIAN S. CHONG
108528
LICENSED PROFESSIONAL ENGINEER

K:\13889\13889-0002-00 Water Plant No. 1\2 Design Phase\CAD\Plans\Archive\Conformed Dwgs\ELEC.dwg May 30,2018 - 2:53pm jrb

C.O.H. LOG No. 18-0447

COH BLK REV. JAN 2006

ORIGINAL SCALE IN INCHES FOR REDUCED PLANS

CONFORMED DOCUMENTS

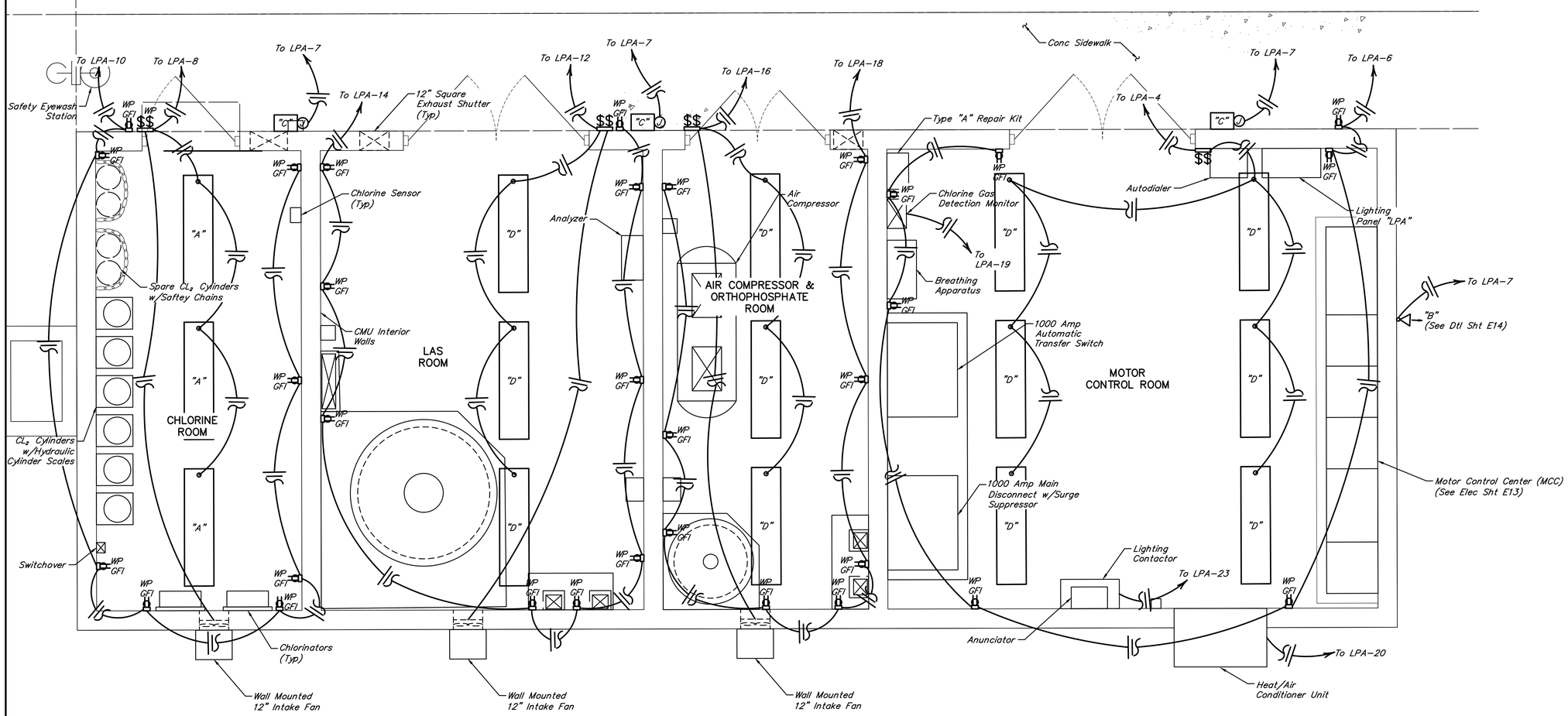

CONTROL BUILDING LIGHTING LAYOUT

SCALE: 1/2" = 1'-0"

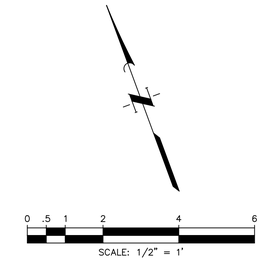

NOTES:

1. Routing is diagrammatic only, contractor shall route conduit best way minimizing bends.

APPROVED: _____ S.B.C. DEVELOPMENT COORDINATOR

DATE: 5/21/18

NO.	DATE	REVISIONS	APP.
1	05/30/18	ISSUED FOR CONSTRUCTION	BSC

FORT BEND COUNTY M.U.D. No. 134E
FORT BEND COUNTY, TEXAS

JONES | CARTER
Texas Board of Professional Engineers Registration No. F-439
6330 West Loop South, Suite 150 • Bellaire, TX 77401 • 713.777.5337

HARVEST GREEN
WATER PLANT No. 1

ELECTRICAL BUILDING
LIGHTING LAYOUT

NOTE: CITY SIGNATURES VALID FOR ONE YEAR ONLY AFTER DATE OF SIGNATURES

CITY OF HOUSTON
DEPARTMENT OF PUBLIC WORKS AND ENGINEERING

WATER 04/12/18	TRAFFIC & TRANSPORTATION
WASTEWATER 4/12/18	STORM WATER QUALITY
STORM 4/12/18	FACILITIES 04/12/18
STREET & DRAINAGE	

4-12-18
STATE OF TEXAS
BRIAN S. CHONG
108528
LICENSED PROFESSIONAL ENGINEER

FILE NO:
JOB NO: 13889-0002-00
DATE: April 2018
DGN. BY: KADOMINGUEZ
DWG. BY: JASTRUHAR
SCALE: 1/2"=1'
E4
SHEET No. 29 OF 47

FOR CITY OF HOUSTON USE ONLY
CITY DWG NO.
PUBLIC WORKS AND ENGINEERING
ACCEPTED AND FILED
60306
CITY DRAWING NUMBER
HOUSTON, TEXAS

K:\13889\13889-0002-00 Water Plant No. 1\2 Design Phase\CAD\Plans\Archive\Conformed Dwgs\ELEC.dwg May 30,2018 - 2:53pm jrb

C.O.H. LOG No. 18-0447

COH BLK REV. JAN 2006

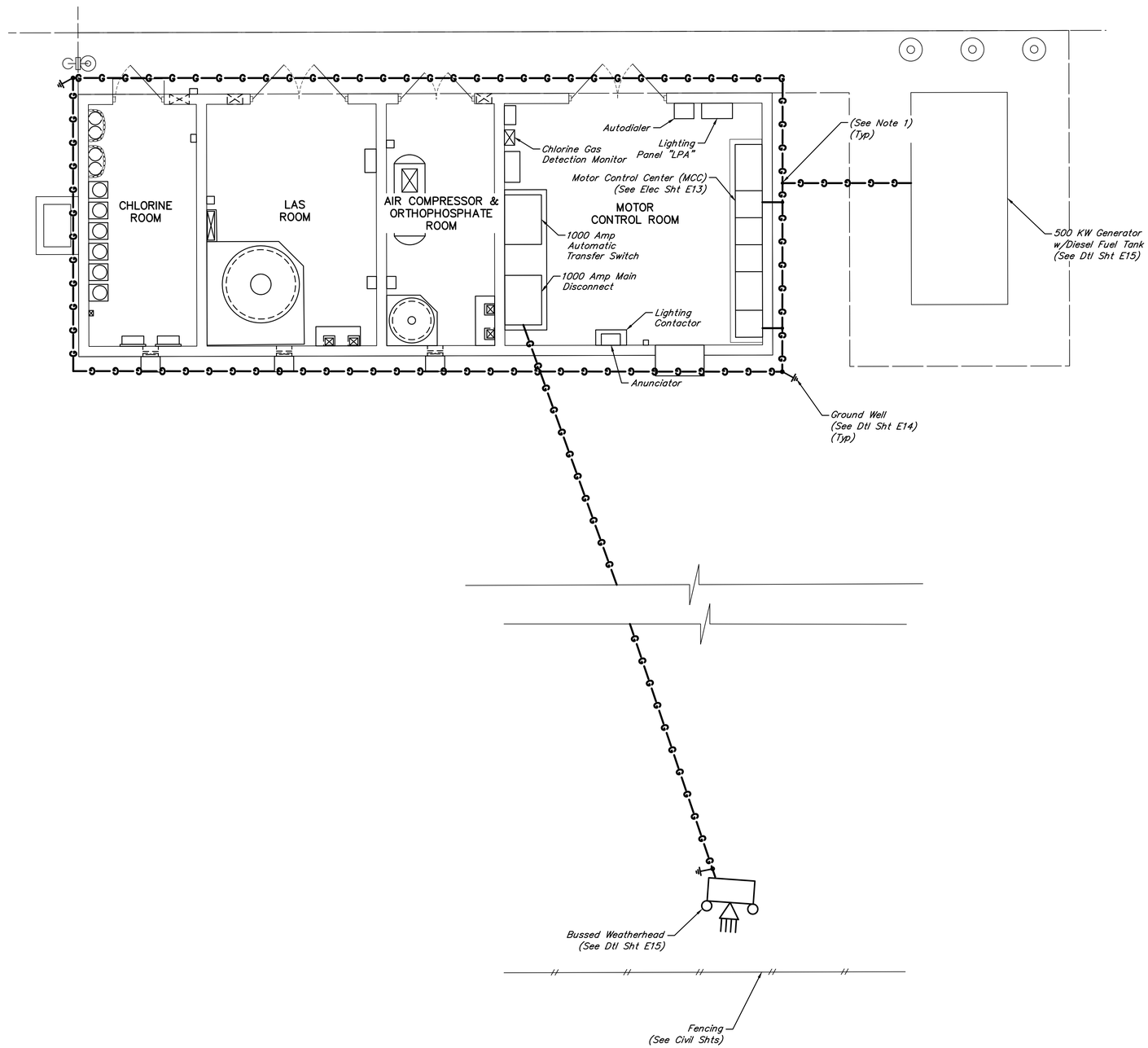

CONTROL BUILDING GROUNDING LAYOUT

SCALE: 1/4" = 1'-0"

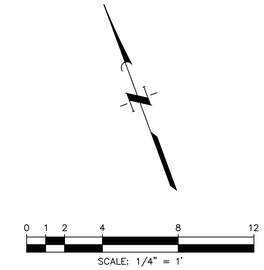

NOTES:

1. Exothermic welding for ground loop shall be used.

APPROVED: _____ (P.B.C. DEVELOPMENT COORDINATOR)

DATE: 5/21/18

NO.	DATE	REVISIONS	APP.
1	05/30/18	ISSUED FOR CONSTRUCTION	BSC

FORT BEND COUNTY M.U.D. No. 134E
FORT BEND COUNTY, TEXAS

JONES | CARTER
Texas Board of Professional Engineers Registration No. F-439
6330 West Loop South, Suite 150 • Bellaire, TX 77401 • 713.777.5337

HARVEST GREEN
WATER PLANT No. 1

ELECTRICAL BUILDING GROUNDING LAYOUT

NOTE: CITY SIGNATURES VALID FOR ONE YEAR ONLY AFTER DATE OF SIGNATURES

CITY OF HOUSTON
DEPARTMENT OF PUBLIC WORKS AND ENGINEERING

WATER	04/12/18	TRAFFIC & TRANSPORTATION	
WASTEWATER	4-12-18	STORM WATER QUALITY	
STORM	4-12-18	FACILITIES	04/12/18
STREET & BRIDGE			

FILE NO:
JOB NO: 13889-0002-00

FOR CITY OF HOUSTON USE ONLY
CITY DWG NO.

DATE: April 2018
DGN. BY: KADOMINGUEZ
DWG. BY: JASTRUHAR

SCALE: AS SHOWN

E5
SHEET No. 30 OF 47

4-12-18

STATE OF TEXAS
BRIAN S. CHONG
108528
LICENSED PROFESSIONAL ENGINEER

PUBLIC WORKS AND ENGINEERING
RECORDED AND FILED
60306
CITY DRAWING NUMBER
HOUSTON, TEXAS

ORIGINAL SCALE IN INCHES FOR REDUCED PLANS

CONFORMED DOCUMENTS

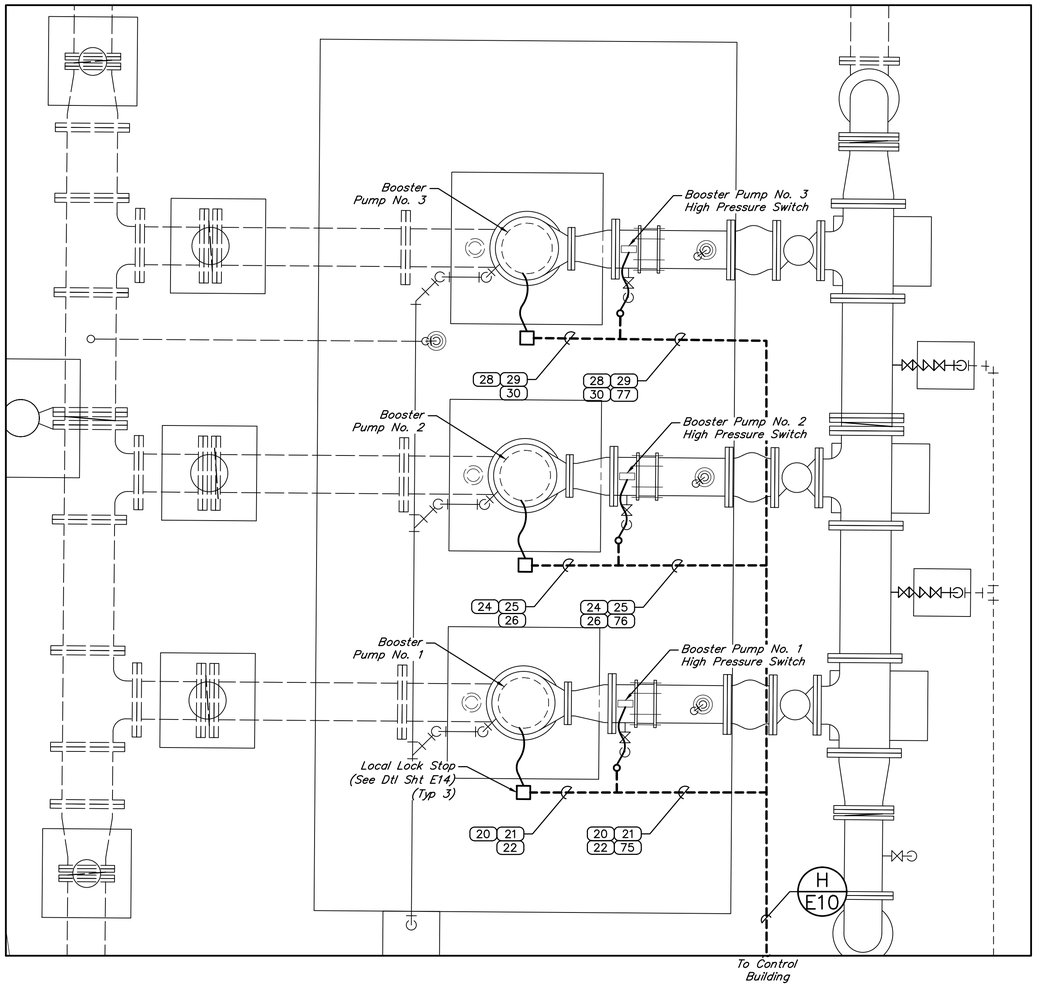

BOOSTER PUMPS ELECTRICAL LAYOUT

SCALE: 1/2" = 1'-0"

0 .5 1 2 4 6

SCALE: 1/2" = 1'

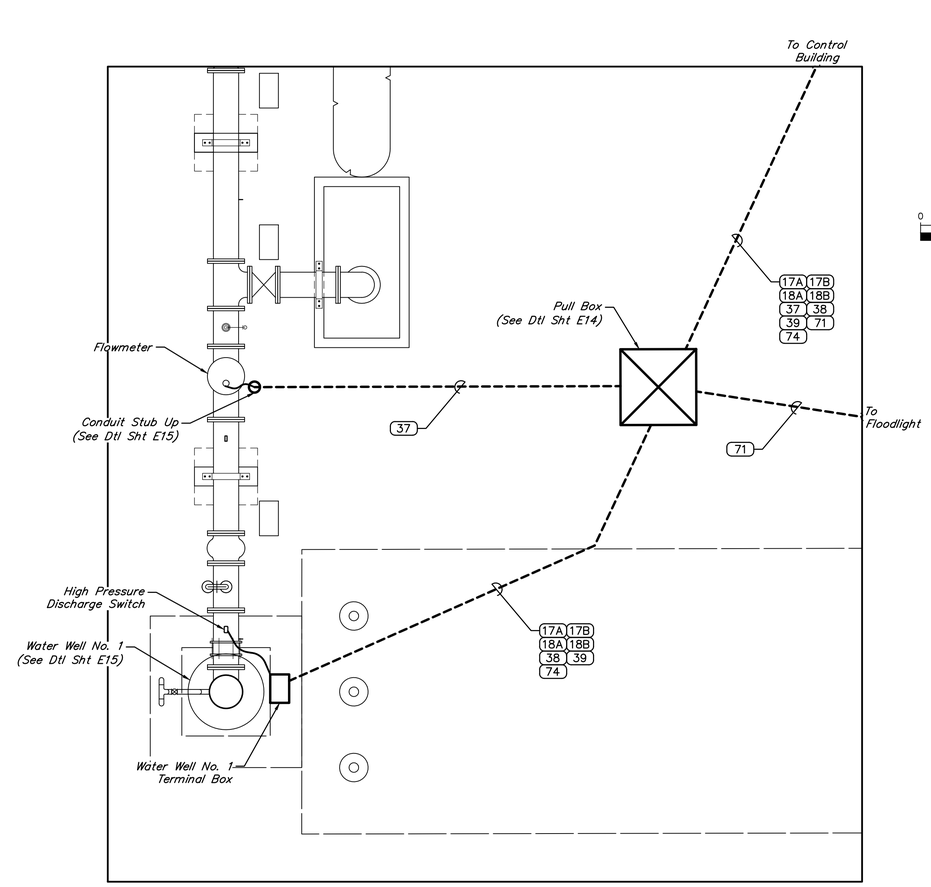

WATER WELL NO. 1 ELECTRICAL LAYOUT

SCALE: 1/4" = 1'-0"

0 1 2 4 8 12

SCALE: 1/4" = 1'

APPROVED: H.C. DEVELOPMENT COORDINATOR

DATE: 5/21/18

NO.	DATE	REVISIONS	APP.
1	05/30/18	ISSUED FOR CONSTRUCTION	BSC

FORT BEND COUNTY M.U.D. No. 134E
FORT BEND COUNTY, TEXAS

JONES | CARTER
Texas Board of Professional Engineers Registration No. F-439
6330 West Loop South, Suite 150 • Bellaire, TX 77401 • 713.777.5337

HARVEST GREEN
WATER PLANT No. 1

ELECTRICAL BOOSTER PUMPS & WATER WELL NO. 1 LAYOUTS

NOTE: CITY SIGNATURES VALID FOR ONE YEAR ONLY AFTER DATE OF SIGNATURES

CITY OF HOUSTON
DEPARTMENT OF PUBLIC WORKS AND ENGINEERING

WATER 04/12/18	TRAFFIC & TRANSPORTATION
WASTEWATER 4/12/18	STORM WATER QUALITY
STORM 4/12/18	FACILITIES 04/19/18
STREET & BRIDGE	

4-12-18

STATE OF TEXAS
BRIAN S. CHONG
108528
LICENSED PROFESSIONAL ENGINEER

FILE NO:
JOB NO: 13889-0002-00

DATE: April 2018
DGN. BY: KADOMINGUEZ
DWG. BY: JASTRUHAR

SCALE: NO SCALE

E6
SHEET No. 31 OF 47

FOR CITY OF HOUSTON USE ONLY
CITY DWG NO.

PUBLIC WORKS AND ENGINEERING
APPROVED PLAN
60306
CITY DRAWING NUMBER
HOUSTON, TEXAS

K:\13889\13889-0002-00 Water Plant No. 1\2 Design Phase\CAD\Plans\Archive\Conformed Dwgs\ELEC.dwg May 30,2018 – 2:53pm jrb

C.O.H. LOG No. 18-0447

COH BLK REV. JAN 2006

ORIGINAL SCALE IN INCHES FOR REDUCED PLANS

CONFORMED DOCUMENTS

CONDUIT SCHEDULE

CONDUIT NO.	CONDUIT SIZE	WIRES: POWER	WIRES: GROUND	WIRES: CONTROL	WIRES: INSTRUMENTS	DESCRIPTION	FROM	TO	DUCT BANK
1	4"	3-400MCM + #3/0 NEU				INCOMING POWER	UTILITY COMPANY	MAIN DISCONNECT	A
2	4"	3-400MCM + #3/0 NEU				INCOMING POWER	UTILITY COMPANY	MAIN DISCONNECT	A
3	4"	3-400MCM + #3/0 NEU				INCOMING POWER	UTILITY COMPANY	MAIN DISCONNECT	A
4	3"	3-400MCM + #3/0 NEU	#3/0			AUTOMATIC TRANSFER SWITCH FEED	MAIN DISCONNECT	AUTOMATIC TRANSFER SWITCH	-
5	3"	3-400MCM + #3/0 NEU	#3/0			AUTOMATIC TRANSFER SWITCH FEED	MAIN DISCONNECT	AUTOMATIC TRANSFER SWITCH	-
6	3"	3-400MCM + #3/0 NEU	#3/0			AUTOMATIC TRANSFER SWITCH FEED	MAIN DISCONNECT	AUTOMATIC TRANSFER SWITCH	-
7	3"	3-400MCM + #3/0 NEU	#3/0			MOTOR CONTROL CENTER FEED	AUTOMATIC TRANSFER SWITCH	MOTOR CONTROL CENTER	-
8	3"	3-400MCM + #3/0 NEU	#3/0			MOTOR CONTROL CENTER FEED	AUTOMATIC TRANSFER SWITCH	MOTOR CONTROL CENTER	-
9	3"	3-400MCM + #3/0 NEU	#3/0			MOTOR CONTROL CENTER FEED	AUTOMATIC TRANSFER SWITCH	MOTOR CONTROL CENTER	-
10	3"	3-400MCM + #3/0 NEU	#3/0			PLANT EMERGENCY POWER	GENERATOR	AUTOMATIC TRANSFER SWITCH	C
11	3"	3-400MCM + #3/0 NEU	#3/0			PLANT EMERGENCY POWER	GENERATOR	AUTOMATIC TRANSFER SWITCH	C
12	3"	3-400MCM + #3/0 NEU	#3/0			PLANT EMERGENCY POWER	GENERATOR	AUTOMATIC TRANSFER SWITCH	C
13	1"				GENERATOR MISC. CONTROLS	GENERATOR MISC. CONTROLS	GENERATOR	AUTOMATIC TRANSFER SWITCH	C
14	1"				ANNUNCIATOR	ANNUNCIATOR	GENERATOR	AUTOMATIC TRANSFER SWITCH	-
15	1"	3-#6	#6			GENERATOR LIGHTING PANEL POWER	GENERATOR	LIGHTING PANEL "A"	D
16	1"		#12	8-#14		GENERATOR & AUTOMATIC TRANSFER SWITCH ALARMS	AUTOMATIC TRANSFER SWITCH	AUTODIALER	-
17A	3"	3-300MCM	#1/0			WELL PUMP No. 1 POWER	MOTOR CONTROL CENTER	WELL PUMP No. 1	B
17B	3"	3-300MCM	#1/0			WELL PUMP No. 1 POWER	MOTOR CONTROL CENTER	WELL PUMP No. 1	B
18A	1"	4-#10	#12			WELL PUMP NO. 1 SPACE HEATER & RECEPTACLES	LIGHTING PANEL "A"	WELL PUMP No. 1	B
18B	2"				9-RTD CABLE	WELL PUMP NO. 1 RTD SIGNALS	MULTILIN	WELL PUMP NO. 1	B
19	2"	3-#1	#6			WELL PUMP No. 1 CAPACITOR FEED	MOTOR CONTROL CENTER	WELL PUMP No. 1 CAPACITOR	-
20	2"	3-#1	#6			BOOSTER PUMP No. 1 POWER	MOTOR CONTROL CENTER	BOOSTER PUMP No. 1	G,H
21	1"		#12	6-#14		BOOSTER PUMP No. 1 CONTROLS	MOTOR CONTROL CENTER	BOOSTER PUMP No. 1	G,H
22	1"	3-#10	#12			BOOSTE PUMP No. 1 SPACE HEATER	LIGHTING PANEL "A"	BOOSTER PUMP No. 1	G,H
23	1"	3-#8	#10			BOOSTER PUMP No. 1 CAPACITOR FEED	MOTOR CONTROL CENTER	BOOSTER PUMP No. 1 CAPACITOR	-
24	2"	3-#1	#6			BOOSTER PUMP No. 2 POWER	MOTOR CONTROL CENTER	BOOSTER PUMP No. 2	G,H
25	1"		#12	6-#14		BOOSTER PUMP No. 2 CONTROLS	MOTOR CONTROL CENTER	BOOSTER PUMP No. 2	G,H
26	1"	3-#10	#12			BOOSTE PUMP No. 2 SPACE HEATER	LIGHTING PANEL "A"	BOOSTER PUMP No. 2	G,H
27	1"	3-#8	#10			BOOSTER PUMP No. 2 CAPACITOR FEED	MOTOR CONTROL CENTER	BOOSTER PUMP No. 2 CAPACITOR	-
28	2"	3-#1	#6			BOOSTER PUMP No. 3 POWER	MOTOR CONTROL CENTER	BOOSTER PUMP No. 3	G,H
29	1"		#12	6-#14		BOOSTER PUMP No. 3 CONTROLS	MOTOR CONTROL CENTER	BOOSTER PUMP No. 3	G,H
30	1"	3-#10	#12			BOOSTE PUMP No. 3 SPACE HEATER	LIGHTING PANEL "A"	BOOSTER PUMP No. 3	G,H
31	1"	3-#8	#10			BOOSTER PUMP No. 3 CAPACITOR FEED	MOTOR CONTROL CENTER	BOOSTER PUMP No. 3 CAPACITOR	-
32	-	-				NOT USED			-
33	2.5"	3-#3/0	#1/0			LIGHTING PANEL "A" POWER	LIGHTING PANEL "A"	37.5KVA TRANSFORMER	-
34	1"	3-#10	#12			AIR COMPRESSOR POWER	MOTOR CONTROL CENTER	AIR COMPRESSOR	-
35	1"	3-#12	#12			MAKE UP WATER BOOSTER PUMP POWER	MOTOR CONTROL CENTER	MAKE UP WATER BOOSTER PUMP	-
36	1"		#12	8-#12		HYDROTANK NO. 1 & 2 LEVEL PROBES	HYDROTANK PRESSURE ENCLOSURE	PLC	F
37	1"				1-#16 SHIELDED TWISTED PAIR	WELL PUMP NO. 1 FLOW	PLC	WELL PUMP NO. 1	B
38	1"		#12	2-#12		WELL PUMP NO. 1 HIGH DISCHARGE PRESSURE ALARM	MOTOR CONTROL CENTER	WELL PUMP NO. 1 HIGH PRESSURE SWITCH	B
39	1"		#12	4-#14		WELL PUMP NO. 1 ALARMS	MOTOR CONTROL CENTER	AUTODIALER	-
40	1"		#12	6-#14	2-#18 SHIELDED TWISTED PAIR	GST NO. 1 PRESSURE ENCLOSURE ANALOG & DISCRETE SIGNALS	AUTOSENSORY PANEL & PLC	GST NO. 1 PRESSURE ENCLOSURE	G,I,K
41	1"				1/4" POLYTUBE	GST NO. 1 PRESSURE SENSING LINE	GST NO. 1	GST NO. 1 PRESSURE ENCLOSURE	-
42	1"	2-#12	#12			GST NO. 1 PRESSURE ENCLOSURE EQUIPMENT POWER	LIGHTING PANEL "A"	GST NO. 1 PRESSURE ENCLOSURE	G,I,K
43	1"	2-#10	#12			EYEWASH STATION HEAT TRACE	LIGHTING PANEL "A"	EYEWASH STATION	G
44	1"	4-#12	#12			EYEWASH STATION AREA LIGHTING & RECEPTACLE	LIGHTING PANEL "A"	EYEWASH STATION	G
45	1"	4#12	#12			HYDROTANK NO.1 RECEPTACLE & LIGHT	LIGHTING PANEL "A"	HYDROTANK NO. 1	F
46	1"	4#12	#12			HYDROTANK NO.2 RECEPTACLE & LIGHT	LIGHTING PANEL "A"	HYDROTANK NO. 2	F
47	1"		#12	4-#12		HYDROTANK NO. 1 LEVEL PROBES	HYDROTANK PRESSURE ENCLOSURE	HYDROTANK NO. 1	F
48	1"		#12	4-#12		HYDROTANK NO. 2 LEVEL PROBES	HYDROTANK PRESSURE ENCLOSURE	HYDROTANK NO. 2	F
49	1"				1/4" POLYTUBE	HYDROTANK NO. 1 PRESSURE SENSING LINE	HYDROTANK PRESSURE ENCLOSURE	HYDROTANK NO. 1	F
50	1"				1/4" POLYTUBE	HYDROTANK NO. 2 PRESSURE SENSING LINE	HYDROTANK PRESSURE ENCLOSURE	HYDROTANK NO. 2	F
51	1"	8-#12	#12			HYDROTANK PRESSURE ENCLOSURE EQUIPMENT POWER	HYDROTANK PRESSURE ENCLOSURE	LIGHTING PANEL "A"	F
52	2"		#12	6-#12	1-#16 SHIELDED TWISTED PAIR	HYDROTANK PRESSURE ENCLOSURE ANALOG & DISCRETE SIGNALS	HYDROTANK PRESSURE ENCLOSURE	AUTOSENSORY PANEL & PLC	F
53	1"				2-#18 SHIELDED TWISTED PAIR	CHLORINATOR NO. 1 & 2 FLOW CONTROL SIGNAL	CHLORINATOR NO. 1 & 2	PLC	-
54	1"		#12	4-#12		CHLORINATOR NO. 1 & 2 FAIL ALARM	CHLORINATOR NO. 1 & 2	AUTODIALER VIA AUTOSENSORY PANEL	-
55	1"		#12	2-#14		MAKE UP WATER LINE SOLENOID VALVE	AUTOSENSORY PANEL	MAKE UP WATER LINE SOLENOID VALVE	-
56	1"	2-#12	#12			CHLORINE DETECTOR POWER	LIGHTING PANEL "A"	CHLORINE DETECTOR	-
57	1"				1-#18 SHIELDED TWISTED PAIR	INDOOR CHLORINE SENSOR	INDOOR CHLORINE SENSOR	CHLORINE DETECTOR	-
58	1"				1-#18 SHIELDED TWISTED PAIR	OUTDOOR CHLORINE SENSOR	OUTDOOR CHLORINE SENSOR	CHLORINE DETECTOR	-
59	1"	2-#12	#12			LAS TANK LEVEL TRANSMITTER POWER	LIGHTING PANEL "A"	LAS LEVEL TRANSMITTER	-
60	1"				1-#18 SHIELDED TWISTED PAIR	LAS TANK LEVEL	PLC	LAS LEVEL TRANSMITTER	-
61	1"		#12	4-#12		LAS PUMP NO. 1 & 2 HIGH PRESSURE SWITCH	PLC	LAS PUMP NO. 1 & 2 HIGH PRESSURE SWITCH	-
62	2"		#12	12-#12	2-#18 SHIELDED TWISTED PAIR	LAS PUMP NO. 1 & 2 ANALOG & DISCRETE SIGNALS	PLC	LAS PUMP NO. 1 & 2	-
63	1"	2-#12	#12			ORTHO TANK LEVEL TRANSMITTER POWER	LIGHTING PANEL "A"	ORTHO LEVEL TRANSMITTER	-
64	1"				1-#18 SHIELDED TWISTED PAIR	ORTHO TANK LEVEL	PLC	ORTHO LEVEL TRANSMITTER	-
65	1"		#12	4-#12		ORTHO PUMP NO. 1 & 2 HIGH PRESSURE SWITCH	PLC	ORTHO PUMP NO. 1 & 2 HIGH PRESSURE SWITCH	-
66	2"		#12	12-#12	2-#18 SHIELDED TWISTED PAIR	ORTHO PUMP NO. 1 & 2 ANALOG & DISCRETE SIGNALS	PLC	ORTHO PUMP NO. 1 & 2	-
67	1"		#12	4-#12		HYDROTANK NO. 1 & 2 AIR FEED SOLENOID VALVE	HYDROTANK NO. 1 & 2 SOLENOID VALVE	AUTOSENSORY PANEL	-
68	1"	2-#12	#12			FLOODLIGHT NO. 1 POWER	LIGHTING PANEL "A"	FLOODLIGHT NO. 1	G,I,J
69	1"	2-#12	#12			FLOODLIGHT NO. 2 POWER	LIGHTING PANEL "A"	FLOODLIGHT NO. 2	F
70	1"	2-#12	#12			FLOODLIGHT NO. 3 POWER	LIGHTING PANEL "A"	FLOODLIGHT NO. 3	D
71	1"	2-#12	#12			FLOODLIGHT NO. 4 POWER	LIGHTING PANEL "A"	FLOODLIGHT NO. 4	B
72	1"		#12	2-#12		CHLORINE LEAK ALARM	CHLORINE DETECTOR	AUTODIALER VIA AUTOSENSORY PANEL	-
73	1"		#12	2-#14		CHLORINE LEAK ALARM BEACON	ALARM BEACON	AUTOSENSORY PANEL	-
74	1"		#12	8-#14		WELL PUMP NO. 1 CONTROLS	WELL PUMP NO. 1	AUTOSENSORY PANEL	B

APPROVED: "C.O.H." DEVELOPMENT COORDINATOR

DATE: 5/21/18

NO.	DATE	REVISIONS	APP.
1	05/30/18	ISSUED FOR CONSTRUCTION	BSC

FORT BEND COUNTY M.U.D. No. 134E
FORT BEND COUNTY, TEXAS

JONES | CARTER
Texas Board of Professional Engineers Registration No. F-439
6330 West Loop South, Suite 150 • Bellaire, TX 77401 • 713.777.5337

HARVEST GREEN
WATER PLANT No. 1

ELECTRICAL CONDUIT SCHEDULE
SHEET 1 OF 2

NOTE: CITY SIGNATURES VALID FOR ONE YEAR ONLY AFTER DATE OF SIGNATURES

CITY OF HOUSTON
DEPARTMENT OF PUBLIC WORKS AND ENGINEERING

WATER 04/12/18	TRAFFIC & TRANSPORTATION
WASTEWATER 4/1/18	STORM WATER QUALITY
STORM 4/12/18	FACILITIES 04/12/18
STREET & BRIDGE	

FILE NO:
JOB NO: 13889-0002-00

DATE: April 2018
DGN. BY: KADOMINGUEZ
DWG. BY: JASTRUHAR
SCALE: NO SCALE

E7
SHEET No. 32 OF 47

FOR CITY OF HOUSTON USE ONLY
CITY DWG NO.

ACCEPTED AND FILED
PUBLIC WORKS AND ENGINEERING
60306
CITY OF HOUSTON
TEXAS

7-12-18

STATE OF TEXAS
BRIAN S. CHONG
106528
LICENSED
PROFESSIONAL ENGINEER

K:\13889\13889-0002-00 Water Plant No. 1\2 Design Phase\CAD\Plans\Archive\Conformed Dwgs\ELEC.dwg May 30,2018 - 2:53pm jrb

C.O.H. LOG No. 18-0447

COH BLK REV. JAN 2006

CONFORMED DOCUMENTS

CONDUIT SCHEDULE

CONDUIT		WIRES							
NO.	SIZE	POWER	GROUND	CONTROL	INSTRUMENTS	DESCRIPTION	FROM	TO	DUCT BANK
75	1"		2-#14	#12		BOOSTER PUMP NO. 1 HIGH PRESSURE DISCHARGE	BOOSTER PUMP NO. 1 HIGH PRESSURE SWITCH	MCC	G,H
76	1"		2-#14	#12		BOOSTER PUMP NO. 2 HIGH PRESSURE DISCHARGE	BOOSTER PUMP NO. 2 HIGH PRESSURE SWITCH	MCC	G,H
77	1"		2-#14	#12		BOOSTER PUMP NO. 3 HIGH PRESSURE DISCHARGE	BOOSTER PUMP NO. 3 HIGH PRESSURE SWITCH	MCC	G,H
78	2"	PULL STRING				FUTURE ANALYZER ALARMS	LAS ROOM	AUTOSENSORY PANEL	-
79	2"	PULL STRING				FUTURE METER STATION SPARE	FIELD DUCT BANK MARKER	AUTOSENSORY PANEL	F
80	2"	PULL STRING				FUTURE METER STATION SPARE	FIELD DUCT BANK MARKER	AUTOSENSORY PANEL	F
81	2"	PULL STRING				FUTURE METER STATION SPARE	FIELD DUCT BANK MARKER	LIGHITNG PANEL "A"	F
82	1"				1-#18 SHIELDED TWISTED PAIR	LAS TANK ULTRASONIC TRANSDUCER SIGNAL	LAS TANK ULTRASONIC TRANSDUCER	LAS TANK LEVEL TRANSMITTER	-
83	1"				1-#18 SHIELDED TWISTED PAIR	ORTHO TANK ULTRASONIC TRANSDUCER SIGNAL	ORTHO TANK ULTRASONIC TRANSDUCER	ORTHO TANK LEVEL TRANSMITTER	-
84	1"		2-#12	#12		CHLORINE LEAK ALARM BEACON NO. 2	ALARM BEACON NO. 2	AUTOSENSORY PANEL	-
85	1"		2-#12	#12		CHLORINE LEAK ALARM SIREN	ALARM SIREN	AUTOSENSORY PANEL	-
86	1"	4-#12	2-#12			LAS PUMP NO. 1 & 2 POWER	LAS PUMP NO. 1 & 2	LIGHITNG PANEL "A"	-
87	1"	4-#12	2-#12			ORTHO PUMP NO. 1 & 2 POWER	ORTHO PUMP NO. 1 & 2	LIGHITNG PANEL "A"	-
88	1"				CAT 5 CABLE	THERMOSTAT CONTROLS	THERMOSTAT	A/C UNIT	-

SPECIAL DEVICE SCHEDULE

ITEM	DESCRIPTION	ITEM	DESCRIPTION
1	24 VDC POWER SUPPLY – PHOENIX CONTACT QUINT SERIES – SIZE 50% GREATER THAN LOAD	16	POWER SYSTEM MONITOR – SQUARE D CLASS 3020, TYPE CM–2350 w/WAVE FORM CAPTURE OR APPROVED EQUAL
2	15" TFT LCD MONITOR – SEE SPECIFICATION 16606	17	FLASHING BEACON – 65FPM, 120 VOLT, RED, ACRYLIC DOME LENS, EDWARDS #105XBRMR120A
3	PHASE FAILURE RELAY – DIVERSIFIED ELECTRONICS #SLD–440–ALE, 480 VOLT, 3 PHASE	18	FLOW METER – 4–20mA & PULSED OUTPUT, SPARLING INSTRUMENTS FT193 FLOW TRANSMITTER OR APPROVED EQUAL
4	CONTROL RELAY – WITH 4 S.P.D.T. SWITCHES RATED 10 AMPS AT 120 VOLT, 120 VOLT COIL, PLUG IN BASE AND SOCKET	19	LIGHTING CONTACTOR – 120V RATED COIL WITH 20A RATED CONTACTS, 4 POLE MINIMUM
5	INDICATING LIGHT – 30MM, PUSH TO TEST, LED, ALLEN BRADLEY 800T TYPE, GLASS LENS, 120 VOLT, 60 Hz. – COLOR AS INDICATED	20	TIME DELAY RELAY – WITH 2 S.P.D.T. SWITCHES RATED 7 AMPS AT 120 VOLT, CONTACTS AND COIL, PLUG IN BASE AND SOCKET, 3 RANGES, 0.1 TO 100 SEC, ATC, MODEL No. 319D–134
6	TIME CLOCK – INTERMATIC SERIES V45000CR WITH ASTRONOMIC DIAL, & SPRING WOUND CARRY–OVER MECHANISM, 120–VOLT, 60HZ, 3PST SWITCH RATED AT 40A, MODEL No. V45471CR30	21	NETWORK SWITCH – NETGEAR DS106
7	ELAPSED TIME METER – CRAMER #635S, 120 VOLT	22	PRESSURE SWITCH – MERCOID SERIES DA, MODEL No. DAW–33–153–7, 5–150 PSI RANGE, NEMA 4 WEATHER–PROOF ENCLOSURE, MANUAL RESET, SPDT MERCURY SWITCH RATED 4 AMPS AT 120 VOLTS
8	SURGE PROTECTION DEVICE – SEE SPECIFICATION 16606	23	PRESSURE SWITCH – MERCOID SERIES EDA, MODEL No. EDA–N1–E1–04T0, 0–100 PSI RANGE, AUTOMATIC RESET, TWO (2) SPDT SWITCHES RATED 5 AMPS AT 120 VOLTS
9	4–20MA SPD–PHOENIX CONTACT UBK 2–PE–24–HB SURGETRAB	24	QUADROPLEXOR – DIVERSIFIED ELECTRONICS ARM–120–AJE
10	SQUARE D MODICON M340 PLC – SEE SPECIFICATION 16491	25	INDUCTION RELAY – WARRICK SEIRES I, 120 VOLT, 60 HZ
11	PHOTOELECTRIC SWITCH – INTERMATIC SERIES K1100, 120 VOLT – MODEL #K1121	26	LIGHTING CONTACTOR – 120V RATED COIL WITH ELECTRICALLY HELD 30A RATED CONTACTS, 4 POLE MINIMUM
12	LIMIT ALARM – ACROMAG FLAT PACK SERIES MODEL 461A; LOOP–POWERED LIMIT ALARM WITH ADJUSTABLE DEAD BAND	27	CELLULAR AUTODIALER – SEE SPECIFICATION
13	PRESSURE TRANSMITTER – ROSEMONT MODEL #3051TG2A2BAHR5M4 0–150 PSI MAX WITH INTERNAL LCD OUTPUT OR APPROVED FOXBORO OR ENDRESS–HAUSER EQUAL	28	GE MULTILIN 469 MOTOR PROTECTION RELAY
14	LEVEL TRANSMITTER – FOXBORO IGP10, RANGED 0 – 34.5 FEET, WITH 3/8" STAINLESS STEEL CONNECTING TUBING		
15	CURRENT SENSING RELAY – CR MAGNETICS SERIES CR 4395–ELR; RANGE 60mA TO 60A; 20A@ 120 VAC S.P.D.T. OUTPUT RELAY		

APPROVED: _____ F.B.C. DEVELOPMENT COORDINATOR

DATE: 5/21/18

NO.	DATE	REVISIONS	APP.
1	05/30/18	ISSUED FOR CONSTRUCTION	BSC

FORT BEND COUNTY M.U.D. No. 134E
FORT BEND COUNTY, TEXAS

JONES | CARTER
Texas Board of Professional Engineers Registration No. F-439
6330 West Loop South, Suite 150 • Bellaire, TX 77401 • 713.777.5337

HARVEST GREEN
WATER PLANT No. 1

ELECTRICAL CONDUIT SCHEDULE SHEET 2 OF 2

NOTE: CITY SIGNATURES VALID FOR ONE YEAR ONLY AFTER DATE OF SIGNATURES

CITY OF HOUSTON
DEPARTMENT OF PUBLIC WORKS AND ENGINEERING

WATER 4/12/18	TRAFFIC & TRANSPORTATION
WASTEWATER 4/12/18	STORM WATER QUALITY
STORM 4/12/18	FACILITIES 4/12/18
STREET & BRIDGE	

FILE NO:
JOB NO: 13889–0002–00

DATE: April 2018
DGN. BY: KADOMINGUEZ
DWG. BY: JASTRUHAR

SCALE: NO SCALE

E8
SHEET No. 33 OF 47

FOR CITY OF HOUSTON USE ONLY
CITY DWG NO.

STATE OF TEXAS
BRIAN S. CHONG
108528
LICENSED PROFESSIONAL ENGINEER
4-12-18

PUBLIC WORKS AND ENGINEERING
REGISTERED
60306
CITY DRAWING REGISTRY
HOUSTON, TEXAS

ORIGINAL SCALE IN INCHES FOR REDUCED PLANS

CONFORMED DOCUMENTS

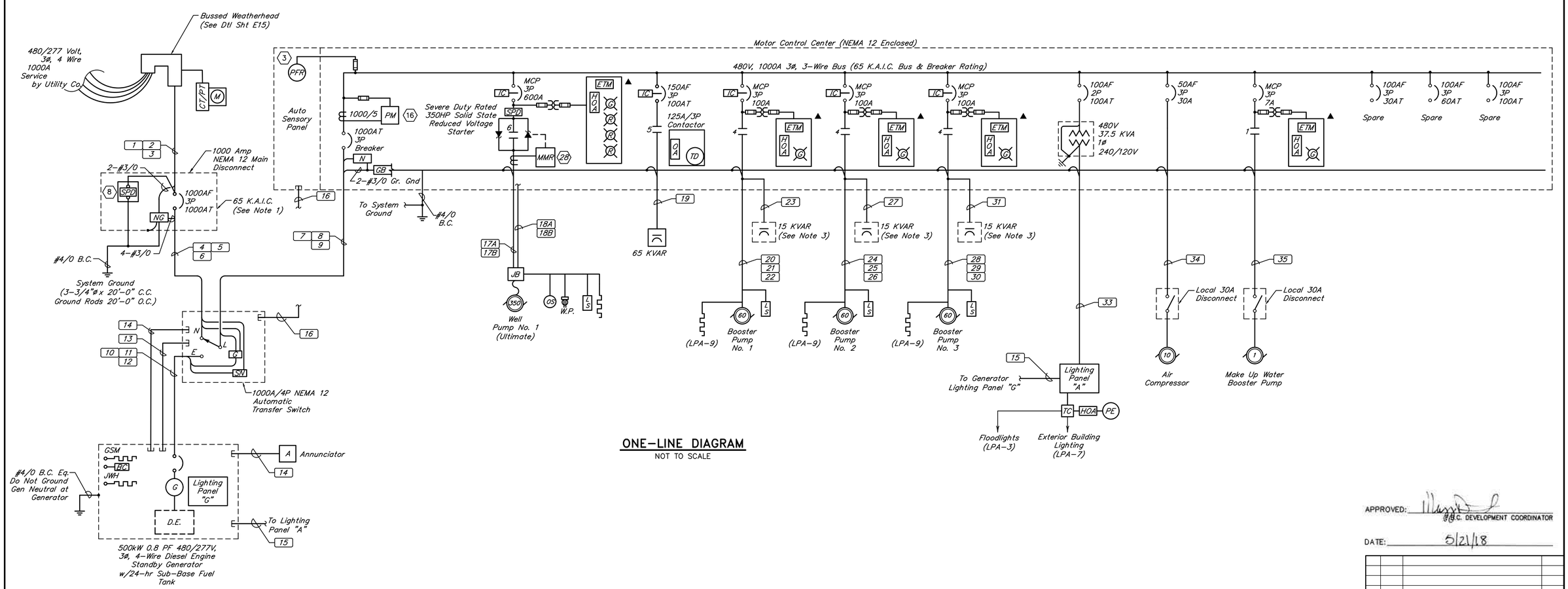

ONE-LINE DIAGRAM

NOT TO SCALE

PANEL LPA

BUS AMPS 225A MLO ____
MAIN BRKR. AMPS 200 WIRE SIZE #4/0
VOLTS 240/120 A/C ____
PHASE 1 WIRE 3 SN ✓

CKT. DESCRIPTION	WIRE	LOAD	BKR.	A	B	BKR.	LOAD	WIRE	CKT. DESCRIPTION
CONTROL POWER	12	500	15	1	2	15	500	12	PLC POWER
SITE FLOOD LIGHTS	12	1250	20	3	4	20	1100	12	CONTROL ROOM LIGHTS
AUTODIALER	12	100	20	5	6	20	1050	12	CONTROL ROOM RECEPTACLES
EXTERIOR BUILDING LIGHTING	12	1200	20	7	8	20	1500	12	CHLORINE ROOM LIGHTS AND FAN
BOOSTER PUMP SPACE HEATERS	10	600	20	9	10	20	2200	12	CHLORINE ROOM RECPTACLES
GENERATOR LIGHTING PANEL "G"	6	6200	100	11	12	20	1500	12	LAS ROOM LIGHTS AND FAN
GENERATOR LIGHTING PANEL "G"	6		2P	13	14	20	2200	12	LAS ROOM RECEPTACLES
GST NO. 1 HEAT TRACE RECEPTACLE	10	500	20	15	16	20	1500	12	AIR COMP. & ORTHO ROOM LIGHTS & FAN
HPT NO. 1 & NO. 2 RECEPTACLES & LIGHTS	12	600	20	17	18	20	2200	12	AIR COMP. & ORTHO ROOM RECEPTACLES
CHLORINE GAS DETECTOR UNIT	12	500	20	19	20	40	3500	10	HEAT/AIR CONDITIONER UNIT
EYEWASH STATION HEAT TRACE	12	200	20	21	22	40	3500	10	HEAT/AIR CONDITIONER UNIT
LIGHTING CONTROLS	12	500	20	23	24	20	500	12	GST NO. 1 PRESSURE ENCLOSURE EQUIPMENT
EYEWASH STATION RECEPTACLE & LIGHT	12	300	20	25	26	20	500	12	HYDROTANK PRESSURE ENCLOSURE EQUIPMENT
LAS TANK LEVEL TRANSMITTER	12	300	20	27	28	20	1000	12	LAS PUMP NO. 1
ORTHO TANK LEVEL TRANSMITTER	12	300	20	29	30	20	1000	12	LAS PUMP NO. 2
SITE FLOODLIGHTS	12	1250	20	31	32	20	1000	12	ORTHO PUMP NO. 1
WELL PUMP NO. 1 SPACE HEATERS	10	300	20	33	34	20	1000	12	ORTHO PUMP NO. 2
SPARE	–	–	20	35	36	20	–	–	SPARE
SPARE	–	–	20	37	38	20	–	–	SPARE
SPACE	–	–	–	39	40	40	–	–	SPARE
SPACE	–	–	–	41	42	2P	–	–	SPARE

N

NOTES:

1. Breakers 1P/20A unless marked otherwise.
2. Adj. ckts. to bal. pnl.
3. Surface mount, NEMA 1

ELECTRICAL LOAD ANALYSIS

LOAD		AMPS ØA	ØB	ØC	SBKW
WELL PUMP No. 1	ULTIMATE 350 HP	414	414	414	282
BOOSTER PUMP No. 1	60 HP	77	77	77	50
BOOSTER PUMP No. 2	60 HP	77	77	77	50
BOOSTER PUMP No. 3	60 HP	77	77	77	
MAKE UP WATER BOOSTER PUMP	1 HP	2.1	2.1	2.1	1
AIR COMPRESSOR	10 HP	14	14	14	9
TRANSFORMER	37.5 KVA	78	–	78	37.5
25% OF LARGEST MOTOR		103.5	103.5	103.5	
TOTAL LOAD		842.6	764.6	842.6	429.5
SERVICE AMPACITY @ 480 VOLT		1000	1000	1000	
SPARE AMPACITY		157.4	235.4	157.4	
FAULT CURRENT				< 65KAIC	

NOTES:

1. Provide Switchboard Style 1000A breaker with L.S.I.G. solid state trip. 65 K.A.I.C. 100% rated, suitable as service disconnect.
2. Provide all conduit entering MCC & other enclosure from bottom with grounding bushing & bond wire per N.E.C. Do not double lug.
3. Mount capacitors on top of the motor control center. Support with P1000 unistrut as required. Capacitor size shown is typical. Provide maximum capacitor size not to exceed motor nameplate max KVAR.
4. Provide traditional "NEMA" devices as defined in NEMA Standards Publication No. ICS 2.4–2003. IEC Components are not allowed.

APPROVED: _____ W.C. DEVELOPMENT COORDINATOR

DATE: 5/21/18

NO.	DATE	REVISIONS	APP.
1	05/30/18	ISSUED FOR CONSTRUCTION	BSC

FORT BEND COUNTY M.U.D. No. 134E
FORT BEND COUNTY, TEXAS

JONES|CARTER
Texas Board of Professional Engineers Registration No. F-439
6330 West Loop South, Suite 150 • Bellaire, TX 77401 • 713.777.5337

HARVEST GREEN
WATER PLANT No. 1

ELECTRICAL ONE LINE DIAGRAM

NOTE: CITY SIGNATURES VALID FOR ONE YEAR ONLY AFTER DATE OF SIGNATURES

CITY OF HOUSTON
DEPARTMENT OF PUBLIC WORKS AND ENGINEERING

WATER ✓ 4/12/18 | TRAFFIC & TRANSPORTATION
WASTEWATER ✓ 4/11/18 | STORM WATER QUALITY
STORM ✓ 4/12/18 | FACILITIES AKO 4/12/18
STREET & BRIDGE

FILE NO:
JOB NO: 13889-0002-00

DATE: April 2018
DGN. BY: KADOMINGUEZ
DWG. BY: JASTRUHAR

SCALE: NO SCALE

E9
SHEET No. 34 OF 47

FOR CITY OF HOUSTON USE ONLY
CITY DWG NO.

PUBLIC WORKS AND ENGINEERING ACCEPTED AND FILED 60306 CITY DRAWING NUMBER HOUSTON, TEXAS

STATE OF TEXAS BRIAN S. CHONG 108528 LICENSED PROFESSIONAL ENGINEER 4-12-18

K:\13889\13889-0002-00 Water Plant No. 1\2 Design Phase\CAD\Plans\Archive\Conformed Dwgs\ELEC.dwg May 30,2018 – 3:10pm jrb

C.O.H. LOG No. 18-0447

COH BLK REV. JAN 2006

ORIGINAL SCALE IN INCHES FOR REDUCED PLANS

CONFORMED DOCUMENTS

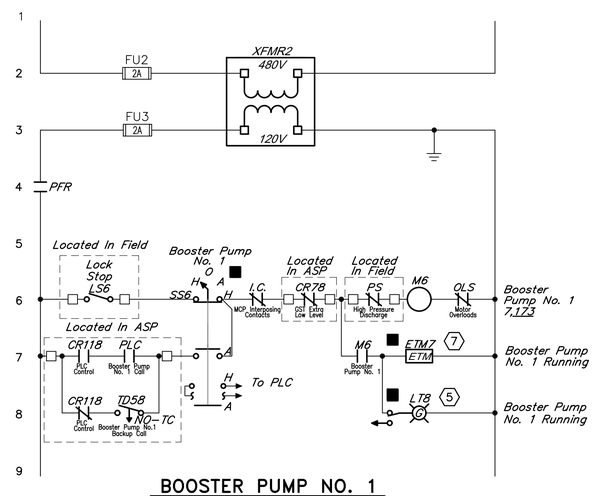

BOOSTER PUMP NO. 1

NOT TO SCALE

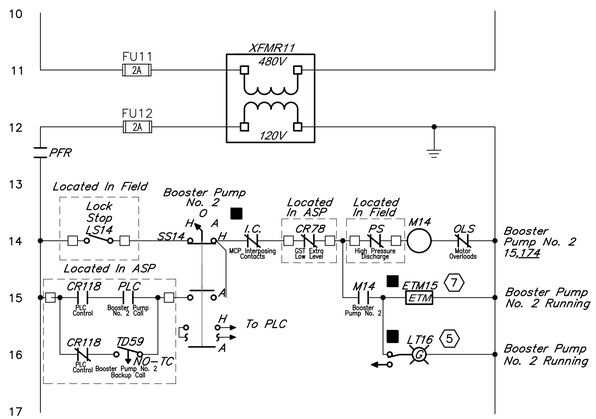

BOOSTER PUMP NO. 2

NOT TO SCALE

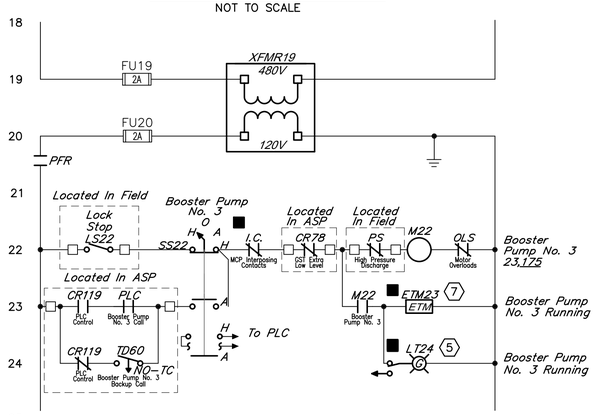

BOOSTER PUMP NO. 3

NOT TO SCALE

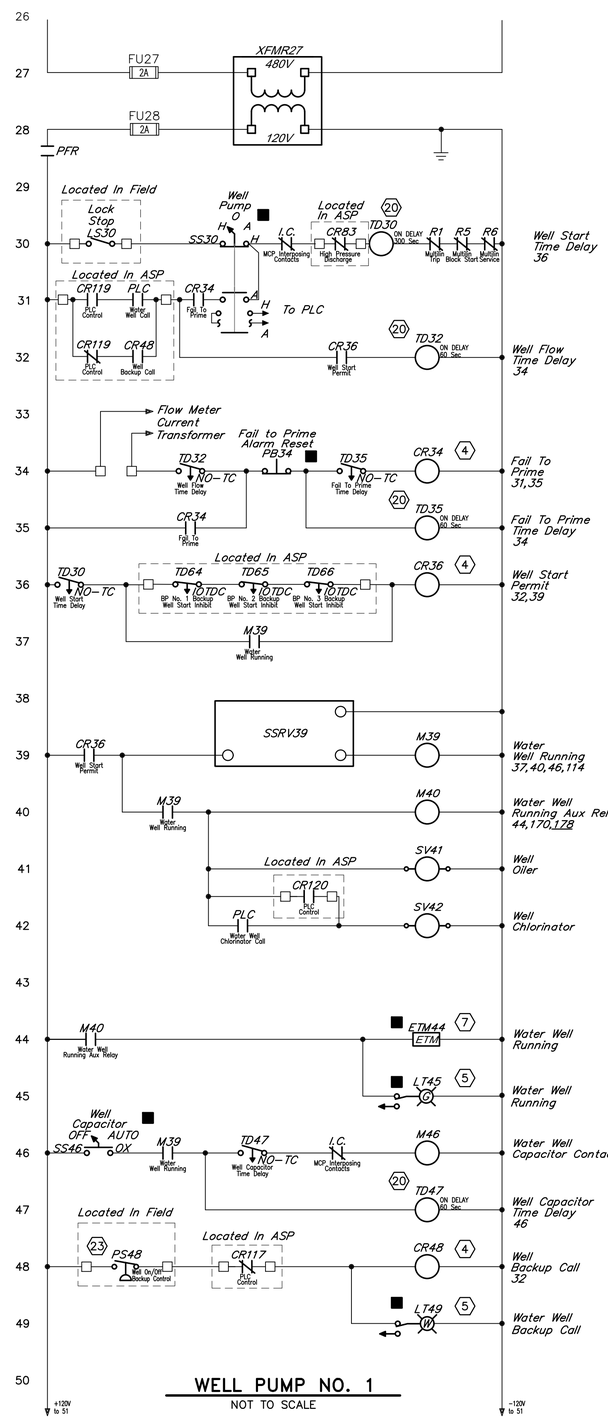

WELL PUMP NO. 1

NOT TO SCALE

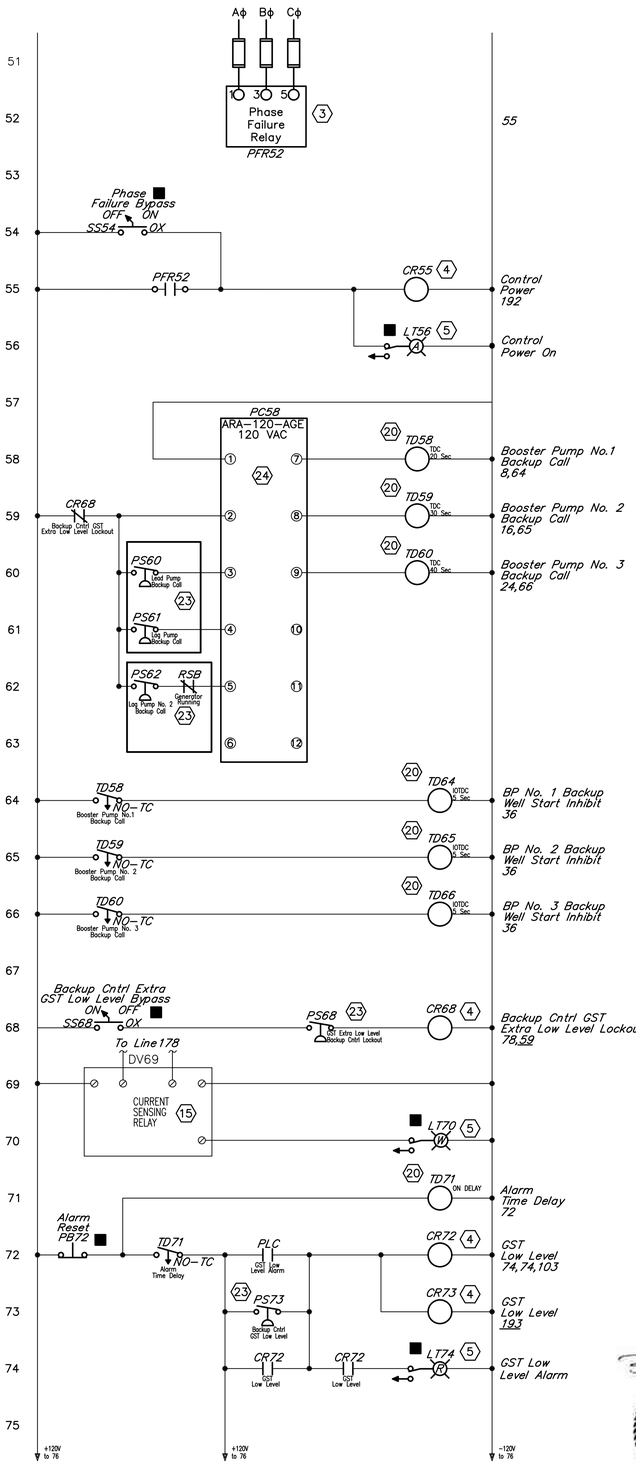

APPROVED: _____ C.O.H. DEVELOPMENT COORDINATOR

DATE: 5/21/18

NO.	DATE	REVISIONS	APP.
1	05/30/18	ISSUED FOR CONSTRUCTION	BSC

FORT BEND COUNTY M.U.D. No. 134E
FORT BEND COUNTY, TEXAS

JONES|CARTER
Texas Board of Professional Engineers Registration No. F-439
6330 West Loop South, Suite 150 • Bellaire, TX 77401 • 713.777.5337

HARVEST GREEN
WATER PLANT No. 1

ELECTRICAL CONTROL DIAGRAM SHEET 1 OF 3

NOTE: CITY SIGNATURES VALID FOR ONE YEAR ONLY AFTER DATE OF SIGNATURES

CITY OF HOUSTON
DEPARTMENT OF PUBLIC WORKS AND ENGINEERING

WATER	TRAFFIC & TRANSPORTATION
WASTEWATER	STORM WATER QUALITY
STORM	FACILITIES
STREET & BRIDGE	

FILE NO:
JOB NO: 13889-0002-00
DATE: April 2018
DGN. BY: KADOMINGUEZ
DWG. BY: JASTRUHAR
SCALE: NO SCALE

FOR CITY OF HOUSTON USE ONLY
CITY DWG NO.

PUBLIC WORKS AND ENGINEERING
RECEIVED AND FILED
60306
CITY CLERK
HOUSTON, TEXAS

4-12-18
STATE OF TEXAS
BRIAN S. CHONG
108528
LICENSED PROFESSIONAL ENGINEER

E10
SHEET No. 35 OF 47

K:\13889\13889-0002-00 Water Plant No. 1\2 Design Phase\CAD\Plans\Archive\Conformed Dwgs\ELEC.dwg May 30,2018 - 2:54pm jyb

C.O.H. LOG No. 18-0447

COH BLK REV. JAN 2006

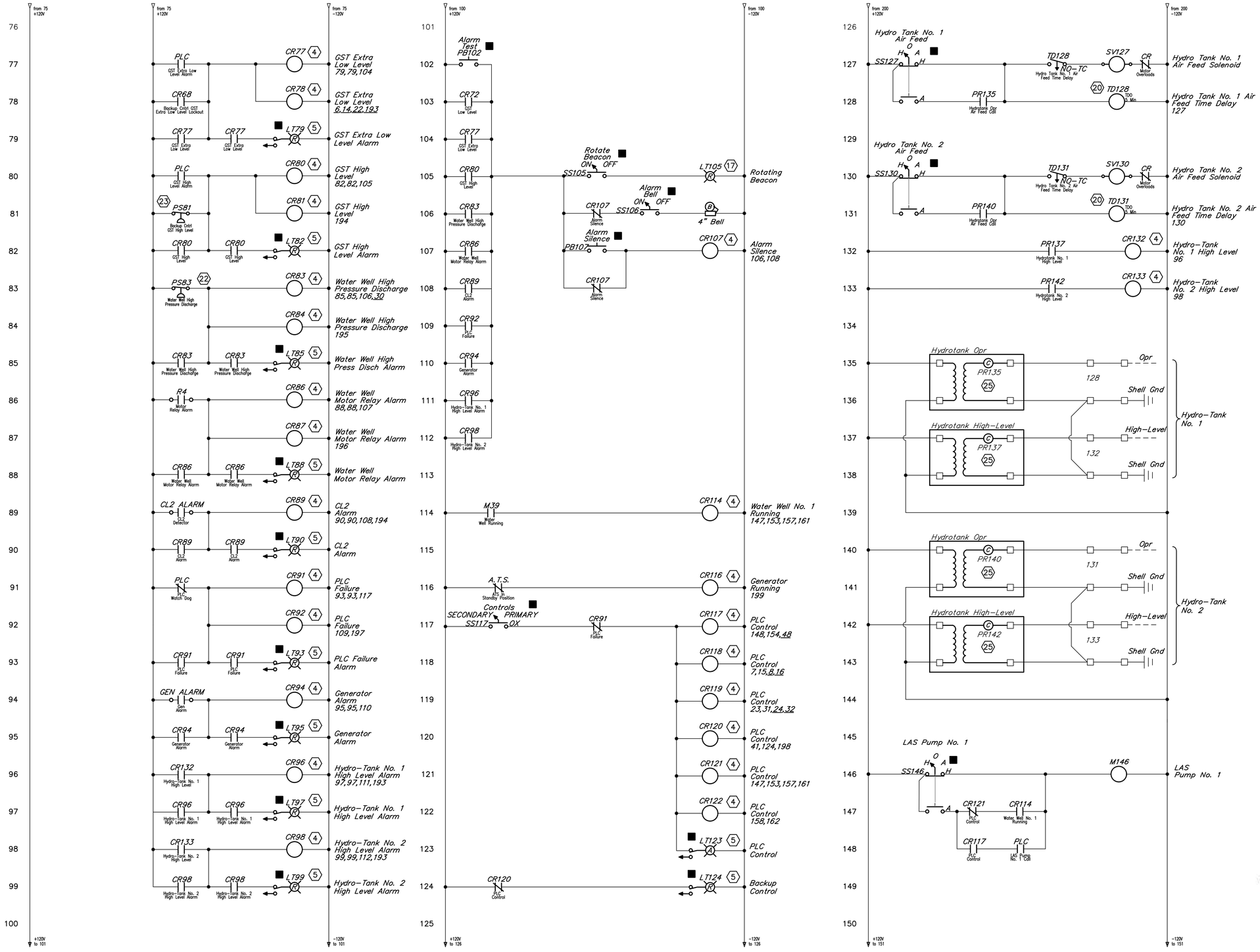

APPROVED: _____ C.O.H. DEVELOPMENT COORDINATOR

DATE: 5/21/18

NO.	DATE	REVISIONS	APP.
1	05/30/18	ISSUED FOR CONSTRUCTION	BSC

FORT BEND COUNTY M.U.D. No. 134E
FORT BEND COUNTY, TEXAS

JONES | CARTER
Texas Board of Professional Engineers Registration No. F-439
6330 West Loop South, Suite 150 • Bellaire, TX 77401 • 713.777.5337

HARVEST GREEN
WATER PLANT No. 1

ELECTRICAL CONTROL DIAGRAM
SHEET 2 OF 3

NOTE: CITY SIGNATURES VALID FOR ONE YEAR ONLY AFTER DATE OF SIGNATURES

CITY OF HOUSTON
DEPARTMENT OF PUBLIC WORKS AND ENGINEERING

WATER	4/12/18	TRAFFIC & TRANSPORTATION	
WASTEWATER	4/12/18	STORM WATER QUALITY	
STORM	4/12/18	FACILITIES	4/12/18
STREET & BRIDGE			

FILE NO:
JOB NO: 13889-0002-00
DATE: April 2018
DGN. BY: KADOMINGUEZ
DWG. BY: JASTRUHAR
SCALE: NO SCALE

FOR CITY OF HOUSTON USE ONLY
CITY DWG NO.

ACCEPTED AND FILED
PUBLIC WORKS AND ENGINEERING
60306
CITY OF HOUSTON, TEXAS

4-12-18

STATE OF TEXAS
BRIAN S. CHONG
108528
LICENSED PROFESSIONAL ENGINEER

E11
SHEET No. 36 OF 47

ORIGINAL SCALE IN INCHES FOR REDUCED PLANS

CONFORMED DOCUMENTS

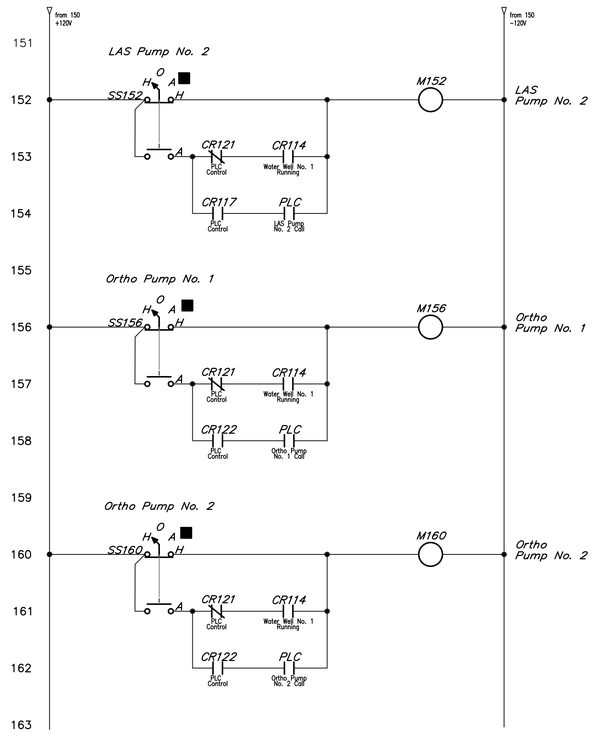

AUTOSENSORY PANEL

NOT TO SCALE

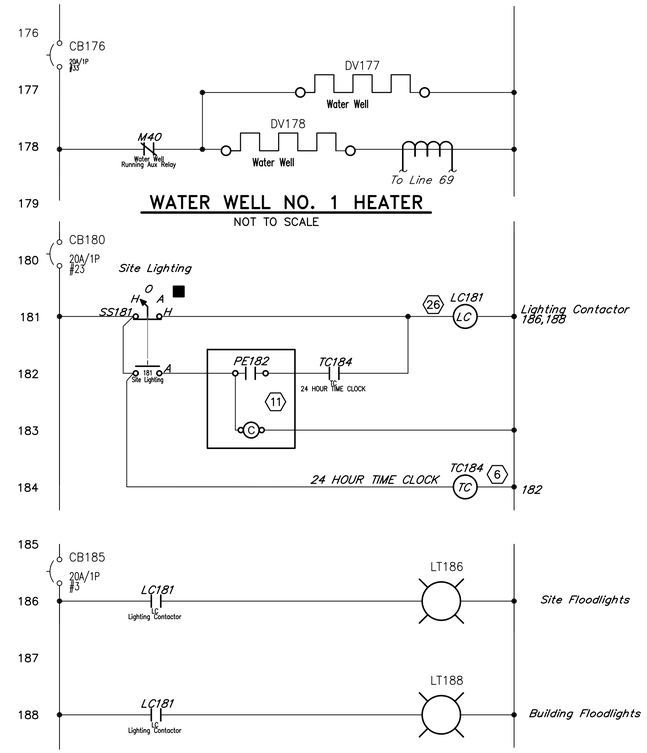

WATER WELL NO. 1 HEATER

NOT TO SCALE

SITE LIGHTING

NOT TO SCALE

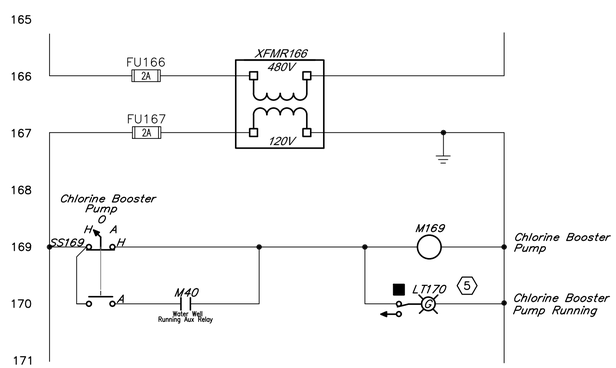

MAKE UP WATER LINE BOOSTER PUMP

NOT TO SCALE

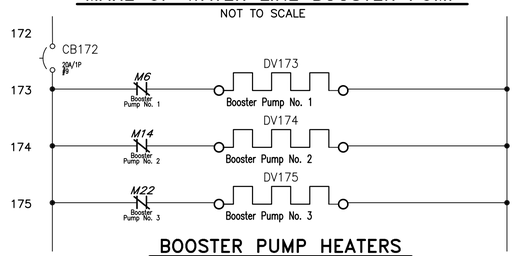

BOOSTER PUMP HEATERS

NOT TO SCALE

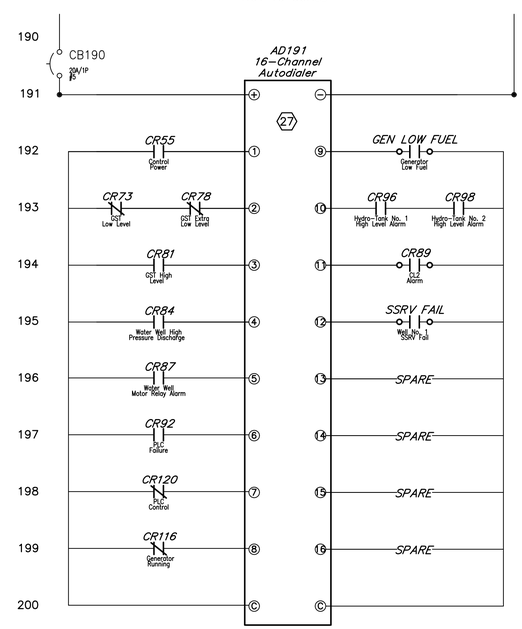

CELLULAR AUTODIALER

NOT TO SCALE

DIGITAL INPUT COMBINATION MODULE SCHEDULE

NO.	DESCRIPTION
1	CONTROL POWER
2	BOOSTER PUMP NO. 1 HAND
3	BOOSTER PUMP NO. 1 AUTO
4	BOOSTER PUMP NO. 1 RUN
5	BOOSTER PUMP NO. 2 HAND
6	BOOSTER PUMP NO. 2 AUTO
7	BOOSTER PUMP NO. 2 RUN
8	BOOSTER PUMP NO. 3 HAND
9	BOOSTER PUMP NO. 3 AUTO
10	BOOSTER PUMP NO. 3 RUN
11	BOOSTER PUMP NO. 1 HIGH PRESSURE ALARM
12	BOOSTER PUMP NO. 2 HIGH PRESSURE ALARM
13	BOOSTER PUMP NO. 3 HIGH PRESSURE ALARM
14	WELL PUMP HAND
15	WELL PUMP AUTO
16	WELL PUMP RUN
17	WELL MULTILIN TRIP
18	WELL MULTILIN BLOCK START
19	WELL MULTILIN SERVICE
20	WELL PUMP MOTOR RELAY ALARM
21	WELL PUMP HIGH PRESSURE DISCHARGE
22	WELL CAPACITOR HAND
23	WELL CAPACITOR AUTO
24	GENERATOR RUNNING
25	GENERATOR FAIL
26	GENERATOR LOW FUEL ALARM
27	ALARM RESET
28	LAS METERING PUMP NO. 1 RUN
29	LAS METERING PUMP NO. 1 FAIL
30	LAS METERING PUMP NO. 1 FLOW FAIL
31	LAS METERING PUMP NO. 2 RUN
32	LAS METERING PUMP NO. 2 FAIL
33	LAS METERING PUMP NO. 2 FLOW FAIL
34	ORTHO METERING PUMP NO. 1 RUN
35	ORTHO METERING PUMP NO. 1 FAIL
36	ORTHO METERING PUMP NO. 1 FLOW FAIL
37	ORTHO METERING PUMP NO. 2 RUN
38	ORTHO METERING PUMP NO. 2 FAIL
39	ORTHO METERING PUMP NO. 2 FLOW FAIL
40	CHLORINATOR NO. 1 FAIL
41	CHLORINATOR NO. 2 FAIL
42	HYDROTANK HIGH LEVEL
43	GST EXTRA LOW LEVEL
44	GST LOW LEVEL
45	GST HIGH LEVEL
46	PRIMARY/SECONDARY CONTROL MODE

DIGITAL OUTPUT COMBINATION MODULE SCHEDULE

NO.	DESCRIPTION
1	BOOSTER PUMP NO. 1 CALL
2	BOOSTER PUMP NO. 2 CALL
3	BOOSTER PUMP NO. 3 CALL
4	FUTURE WELL PUMP CALL
5	GST EXTRA LOW LEVEL ALARM
6	GST LOW LEVEL ALARM
7	GST HIGH LEVEL ALARM
8	PLC WATCH DOG
9	LAS PUMP NO. 1 CALL
10	LAS PUMP NO. 2 CALL
11	ORTHO PUMP NO. 1 CALL
12	ORTHO PUMP NO. 2 CALL

ANALOG INPUT COMBINATION MODULE SCHEDULE

NO.	DESCRIPTION
1	GST NO. 1 LEVEL TRANSMITTER
2	LAS TANK NO. 1 LEVEL TRANSMITTER
3	ORTHO TANK NO. 1 LEVEL TRANSMITTER
4	WELL FLOW INPUT

ANALOG OUTPUT COMBINATION MODULE SCHEDULE

NO.	DESCRIPTION
1	GST LEVEL
2	CHLORINATOR NO. 1 FEED RATE
3	CHLORINATOR NO. 2 FEED RATE
4	LAS PUMP NO. 1 FEED RATE
5	LAS PUMP NO. 2 FEED RATE
6	ORTHO PUMP NO. 1 FEED RATE
7	ORTHO PUMP NO. 2 FEED RATE

APPROVED: F.B.C. DEVELOPMENT COORDINATOR

DATE: 5/21/18

NO.	DATE	REVISIONS	APP.
1	05/30/18	ISSUED FOR CONSTRUCTION	BSC

FORT BEND COUNTY M.U.D. No. 134E
FORT BEND COUNTY, TEXAS

JONES | CARTER
Texas Board of Professional Engineers Registration No. F-439
6330 West Loop South, Suite 150 • Bellaire, TX 77401 • 713.777.5337

HARVEST GREEN
WATER PLANT No. 1

ELECTRICAL CONTROL DIAGRAM SHEET 3 OF 3

NOTE: CITY SIGNATURES VALID FOR ONE YEAR ONLY AFTER DATE OF SIGNATURES

CITY OF HOUSTON
DEPARTMENT OF PUBLIC WORKS AND ENGINEERING

WATER	4/12/18	TRAFFIC & TRANSPORTATION	
WASTEWATER	4/12/18	STORM WATER QUALITY	
STORM	4/12/18	FACILITIES	04/12/18
STREET & BRIDGE			

FILE NO:
JOB NO: 13889-0002-00
DATE: April 2018
DGN. BY: KADOMINGUEZ
DWG. BY: JASTRUHAR
SCALE: NO SCALE

FOR CITY OF HOUSTON USE ONLY
CITY DWG NO.

60306

STATE OF TEXAS
BRIAN S. CHONG
108528
LICENSED PROFESSIONAL ENGINEER
4-12-18

E12
SHEET No. 37 OF 47

K:\13889\13889-0002-00 Water Plant No. 1\2 Design Phase\CAD\Plans\Archive\Conformed Dwgs\ELEC.dwg May 30,2018 - 2:54pm jrb

C.O.H. LOG No. 18-0447

COH BLK REV. JAN 2006

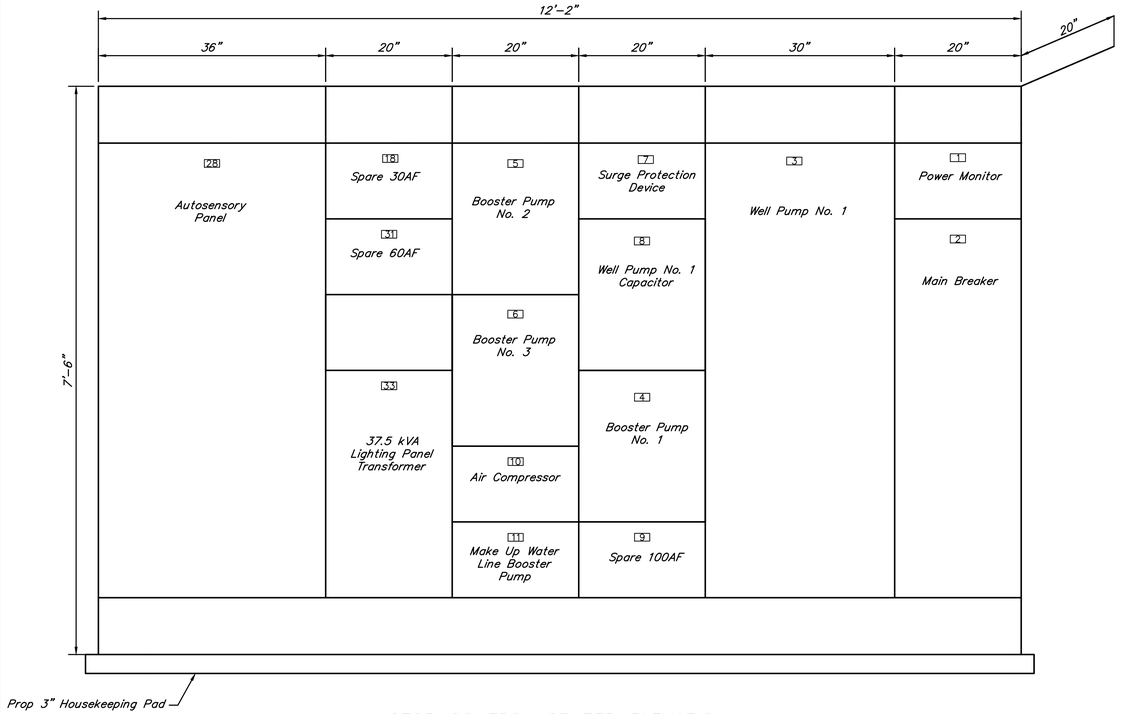

MOTOR CONTROL CENTER ELEVATION

SCALE: 1" = 1'-0"

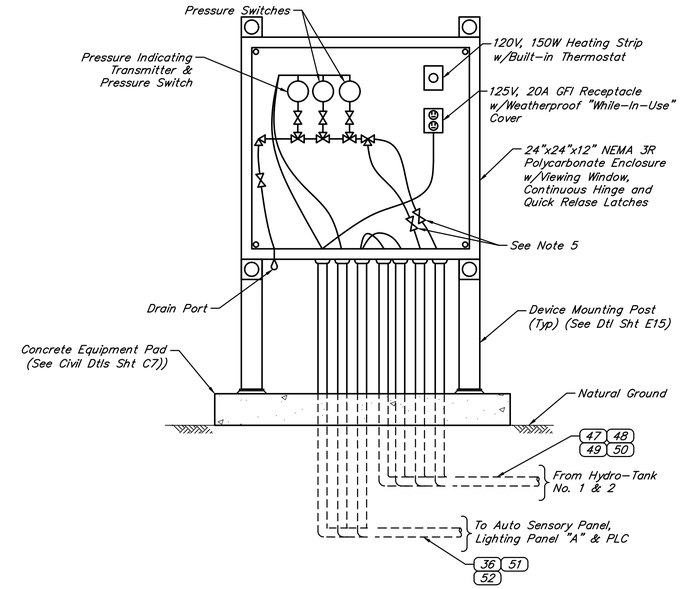

HYDRO-TANK PRESSURE ENCLOSURE DETAIL

NOT TO SCALE

NOTES:

1. Provide traditional NEMA devices as defined in NEMA Standards Publication No. ICS 2.4.2003. IEC components are not allowed.
2. Contractor shall install 304 stainless steel tubing with stainless steel swagelok fittings and ball valves (typical).
3. Provide manufacturers panel mount support for mounting to interior back panel of enclosure.
4. Booster pump and water well capacitors shall be mounted on top of the MCC enclosure.
5. Contractor shall label each ball valve according to their corresponding hydrotank.

NAMEPLATE SCHEDULE

NO.	DESCRIPTION	NO.	DESCRIPTION
1	POWER MONITOR	24	ALARM RESET
2	MAIN DISCONNECT BREAKER	25	CONTROL MODE SELECTOR
3	WELL PUMP NO. 1	26	FLOODLIGHTS H-O-A
4	BOOSTER PUMP NO. 1	27	HMI
5	BOOSTER PUMP NO. 2	28	AUTOSENSORY PANEL
6	BOOSTER PUMP NO. 3	29	GENERATOR ALARM
7	SURGE PROTECTION	30	PLC CONTROL
8	WELL PUMP NO. 1 CAPACITOR	31	SPARE
9	CL2 ALARM	32	PRIMARY/BACKUP
10	AIR COMPRESSOR	33	37.5 KVA LIGHTING PANEL TRANSFORMER
11	MAKE UP WATERLINE BOOSTER PUMP	34	SERVICE ENTRANCE MAIN DISCONNECT
12	PHASE FAILURE RELAY BYPASS	35	AUTOMATIC TRANSFER SWITCH
13	CONTROL POWER	36	WELL PUMP NO. 1 HIGH PRESSURE ALARM
14	SPARE	37	WELL PUMP NO. 1 MOTOR RELAY ALARM
15	GST EXTRA LOW LEVEL ALARM	38	HYDROTANK NO. 1 HIGH LEVEL ALARM
16	GST LOW LEVEL ALARM	39	HYDROTANK NO. 2 HIGH LEVEL ALARM
17	GST HIGH LEVEL ALARM	40	HYDROTANK NO. 1 H-O-A SWITCH
18	SPARE	41	HYDROTANK NO. 2 H-O-A SWITCH
19	PLC FAIL	42	LAS PUMP NO. 1 H-O-A
20	ROTATING BEACON ON-OFF	43	LAS PUMP NO. 2 H-O-A
21	ALARM BELL ON-OFF	44	ORTHO PUMP NO. 1 H-O-A
22	ALARM SILENCE	45	ORTHO PUMP NO. 2 H-O-A
23	ALARM TEST		

NOTE:

Nameplates shall be constructed from laminated plastic material a minimum of 1/16" thick. Letters shall be gothic 3/16" high minimum, use two lines if description will cause length to exceed 2 1/2". Alarm nameplates shall be white letters on red background; others shall be black letters on white background. Affix nameplates to panel using self-tapping stainless steel screws. Submit details of Autosensory Panel including, but not limited to, dimensional drawings, nameplate schedule, swing out panel layout, back panel layout and wiring and control schematics. These shall be included as part of Specification No. 01300.

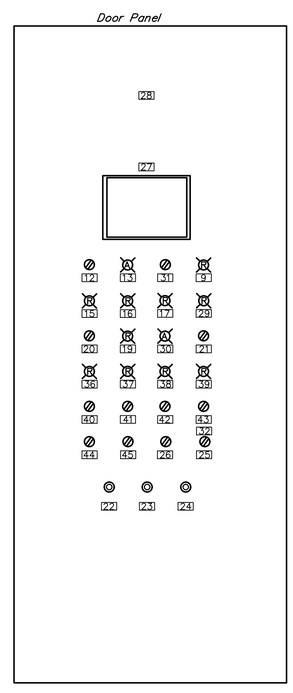

AUTOSENSORY PANEL

NOT TO SCALE

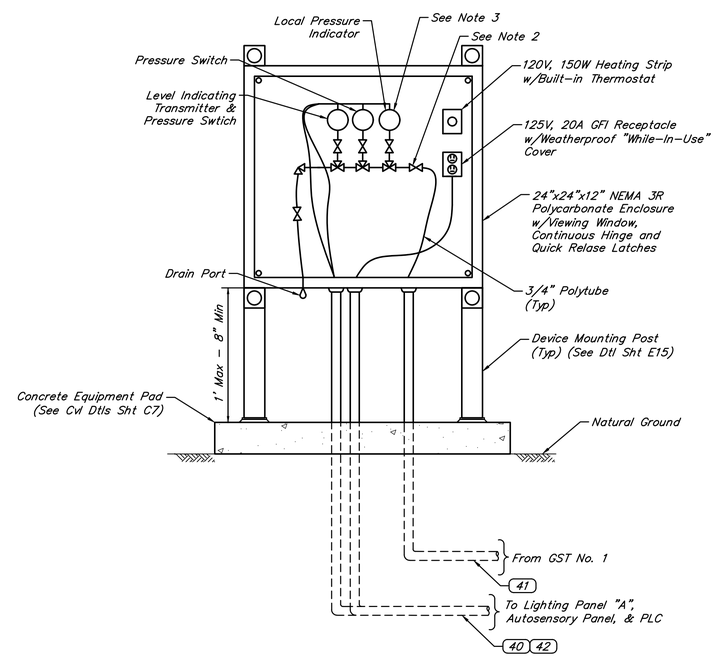

GST NO. 1 PRESSURE ENCLOSURE DETAIL

NOT TO SCALE

APPROVED: _____ P.W.O. DEVELOPMENT COORDINATOR

DATE: 5/21/18

NO.	DATE	REVISIONS	APP.
1	05/30/18	ISSUED FOR CONSTRUCTION	BSC

FORT BEND COUNTY M.U.D. No. 134E
FORT BEND COUNTY, TEXAS

JONES|CARTER
Texas Board of Professional Engineers Registration No. F-439
6330 West Loop South, Suite 150 • Bellaire, TX 77401 • 713.777.5337

HARVEST GREEN
WATER PLANT No. 1

ELECTRICAL DETAILS
SHEET 1 OF 3

NOTE: CITY SIGNATURES VALID FOR ONE YEAR ONLY AFTER DATE OF SIGNATURES

CITY OF HOUSTON
DEPARTMENT OF PUBLIC WORKS AND ENGINEERING

WATER	04/12/18	TRAFFIC & TRANSPORTATION	
WASTEWATER	4/12/18	STORM WATER QUALITY	
STORM	4/12/18	FACILITIES	04/12/18
STREET & BRIDGE			

FILE NO:
JOB NO: 13889-0002-00

DATE: April 2018
DGN. BY: KADOMINGUEZ
DWG. BY: JASTRUHAR

SCALE: NO SCALE

E13
SHEET No. 38 OF 47

FOR CITY OF HOUSTON USE ONLY
CITY DWG NO.

PUBLIC WORKS AND ENGINEERING
ACCEPTED AND FILED
60306
CITY DRAWING NUMBER
HOUSTON, TEXAS

4-12-18
STATE OF TEXAS
BRIAN S. CHONG
108528
LICENSED
PROFESSIONAL ENGINEER

ORIGINAL SCALE IN INCHES FOR REDUCED PLANS

CONFORMED DOCUMENTS

NOTE:

1. Light fixture to be oriented no more than 20° upward from straight down per Fort Bend County lighting regulations.
2. Contractor shall submit lighting pole layout with height and location of mounting bracket.

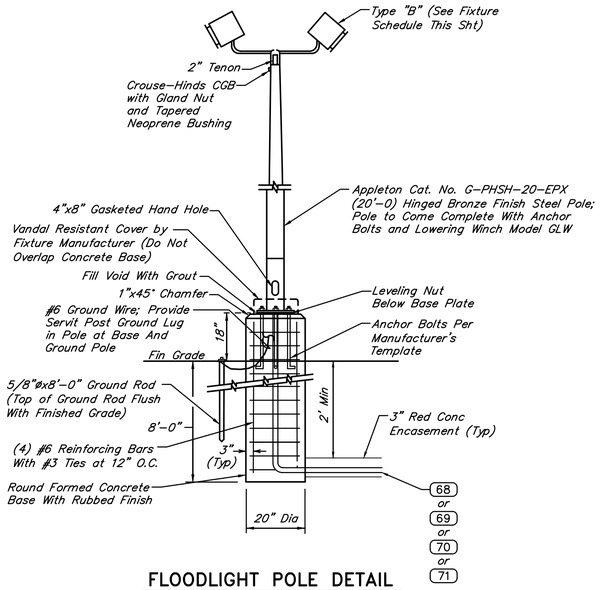

FLOODLIGHT POLE DETAIL

NOT TO SCALE

LIGHTING FIXTURE SCHEDULE

TYPE	MANUFACTURER	VOLTAGE	MOUNTING	LAMPS NO.	LAMPS TYPE	REMARKS
A	ECO LIGHTING SOLUTIONS ECOVP2TLED1840	120	CEILING	2	LED	VAPOR TIGHT LINEAR LED LIGHT FIXTURE W/FIBERGLASS HOUSING
B	APPLETON AMLED77-BUI1-D W/POLE TOP SLIPFITTER AND VANDAL SHIELD (G-AM-6-VS)	120	SLIP-FITTER	2	LED 13,500 LUMENS	AREAMASTER W/VANDAL SHIELD, SEE DETAIL THIS SHT.
C	LITHONIA OLW-23	120	WALL	1	LED 2720 LUMENS	2 LAMP ENCLOSED
D	LITHONIA STL4 48L EZ1 LP850	120	CEILING	2	LED	2 LAMP ENCLOSED

NOTES:

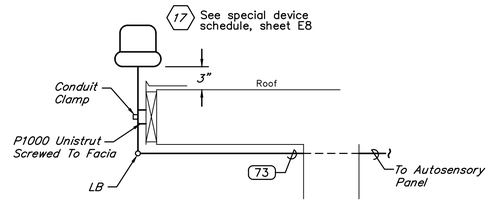

BEACON LIGHT INSTALLATION

NOT TO SCALE

FLOODLIGHT NOTES:

1. All hardware to be hot dip galvanized.
2. Use slipfitter for single fixture installation, use poletop bracket for two fixture installation (Appleton #G-PB-2).

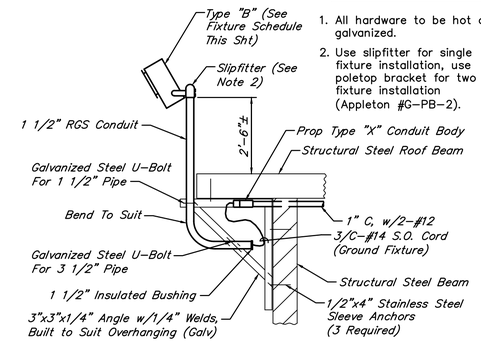

BUILDING FLOODLIGHT INSTALLATION

NOT TO SCALE

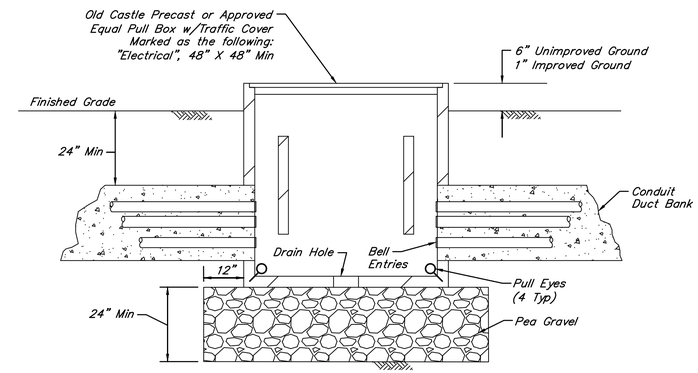

ELECTRICAL PULL BOX INSTALLATION

NOT TO SCALE

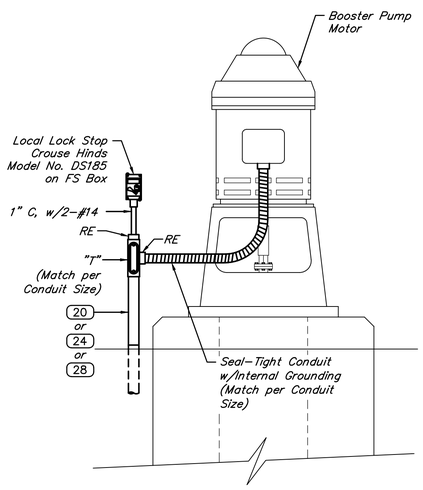

BOOSTER PUMP ELECTRICAL DETAIL

NOT TO SCALE

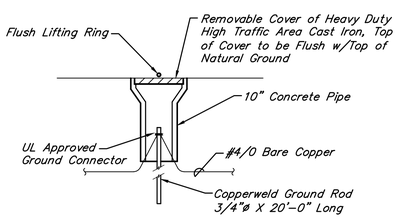

GROUND WELL DETAIL

NOT TO SCALE

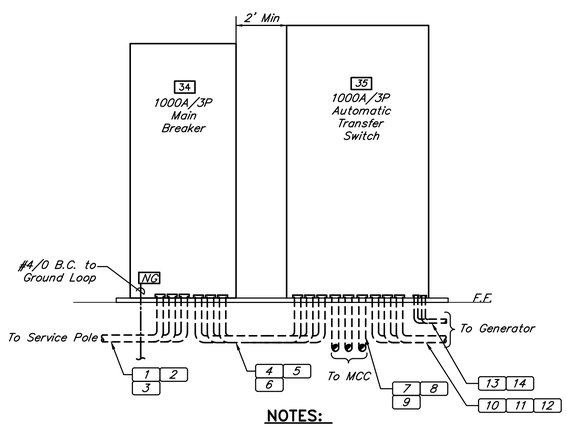

NOTES:

1. See nameplate schedule on Sheet E13.

SERVICE ENTRANCE LAYOUT

NOT TO SCALE

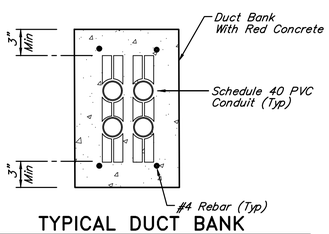

TYPICAL DUCT BANK

NOT TO SCALE

DUCTBANK NOTES:

1. All power and instrumentation conductors shall be installed in separate conduits. Instrumentation & power conduits must have a minimum of 12" of spacing. Route power and instrumentation conductors in separate pull boxes.
2. If conduits inside duct bank does not match a typical detail shown, use next largest duct bank and remove conduits from top row as necessary.

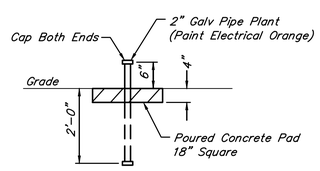

DUCT BANK MARKER DETAIL

NOT TO SCALE

APPROVED: H.C. DEVELOPMENT COORDINATOR

DATE: 5/21/18

NO.	DATE	REVISIONS	APP.
1	05/30/18	ISSUED FOR CONSTRUCTION	BSC

FORT BEND COUNTY M.U.D. No. 134E
FORT BEND COUNTY, TEXAS

JONES|CARTER
Texas Board of Professional Engineers Registration No. F-439
6330 West Loop South, Suite 150 • Bellaire, TX 77401 • 713.777.5337

HARVEST GREEN WATER PLANT No. 1

ELECTRICAL DETAILS SHEET 2 OF 3

NOTE: CITY SIGNATURES VALID FOR ONE YEAR ONLY AFTER DATE OF SIGNATURES

CITY OF HOUSTON
DEPARTMENT OF PUBLIC WORKS AND ENGINEERING

WATER / WASTEWATER — TRAFFIC & TRANSPORTATION
STORM WATER QUALITY
STORM / STREET & BRIDGE — FACILITIES

FILE NO:
JOB NO: 13889-0002-00
DATE: April 2018
DGN. BY: KADOMINGUEZ
DWG. BY: JASTRUHAR
SCALE: NO SCALE

FOR CITY OF HOUSTON USE ONLY
CITY DWG NO. 60306

STATE OF TEXAS — BRIAN S. CHONG 108528 — LICENSED PROFESSIONAL ENGINEER

E14
SHEET No. 39 OF 47

K:\13889\13889-0002-00 Water Plant No. 1\2 Design Phase\CAD\Plans\Archive\Conformed Dwgs\ELEC.dwg May 30,2018 - 2:54pm jrb

C.O.H. LOG No. 18-0447

COH BLK REV. JAN 2006

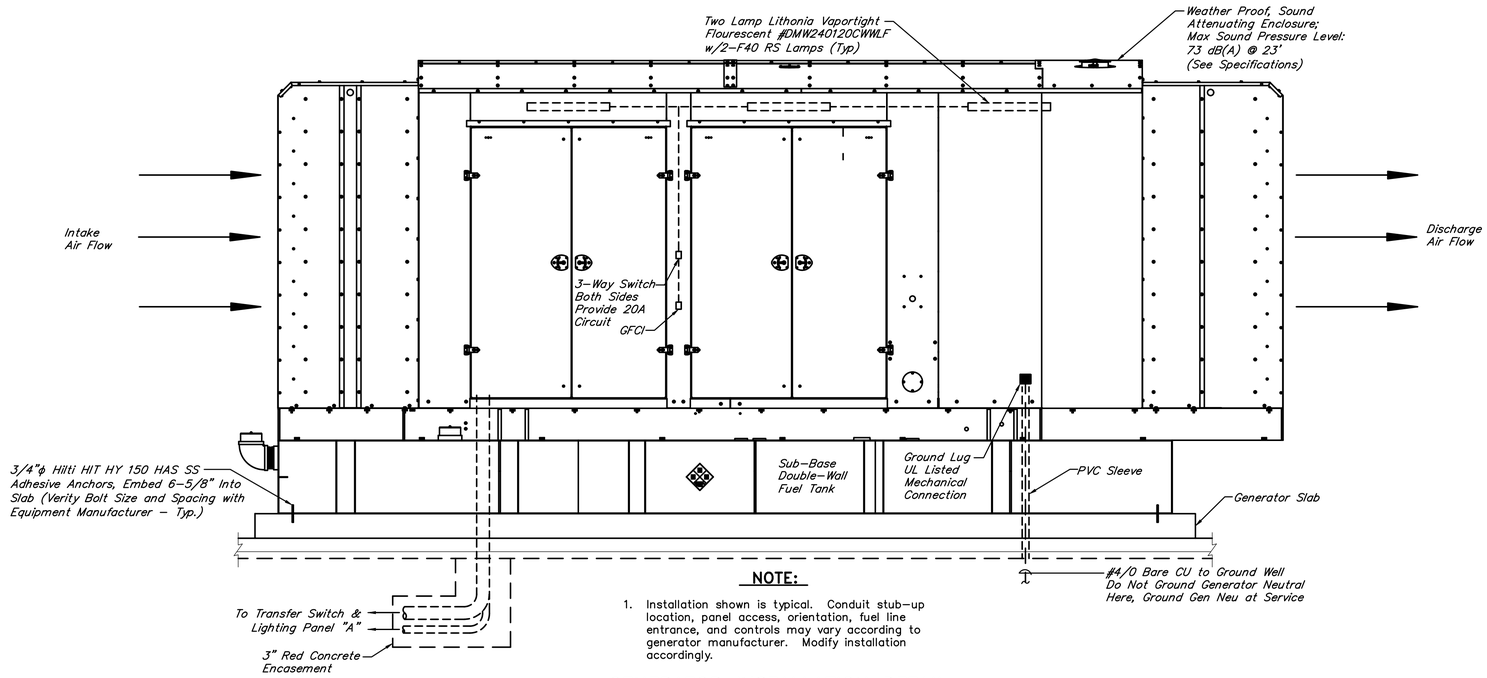

NOTE:

1. Installation shown is typical. Conduit stub-up location, panel access, orientation, fuel line entrance, and controls may vary according to generator manufacturer. Modify installation accordingly.

GENERATOR INSTALLATION DETAIL

NOT TO SCALE

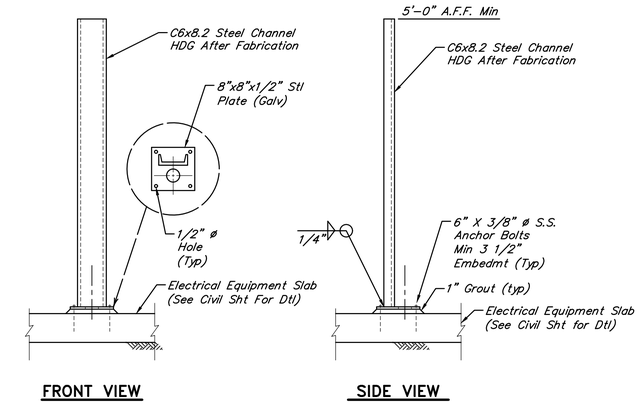

DEVICE MOUNTING POST DETAIL

NOT TO SCALE

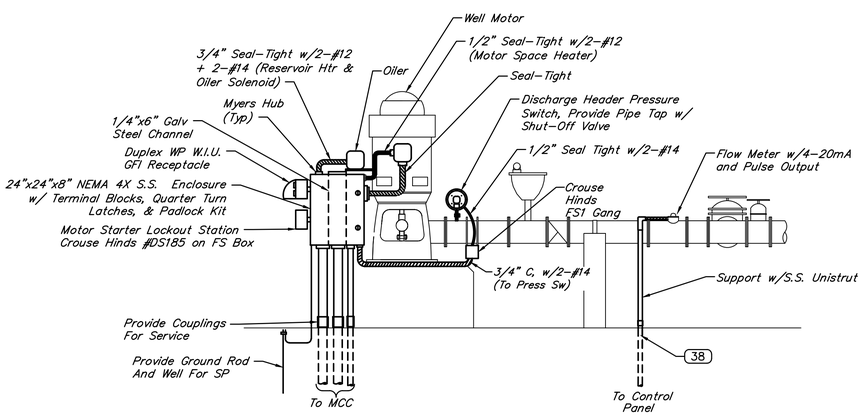

NOTES:

1. Install surge protector on back side of junction box, front access with indicating light kit installed on outer frame door.
2. Support terminal boxes with stainless steel unistrut.

WELL PUMP No. 1 ELECTRICAL DETAIL

NOT TO SCALE

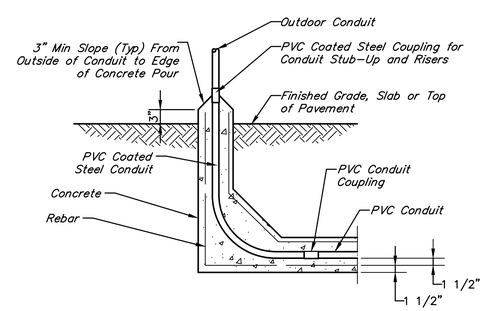

CONDUIT STUB-UP

NOT TO SCALE

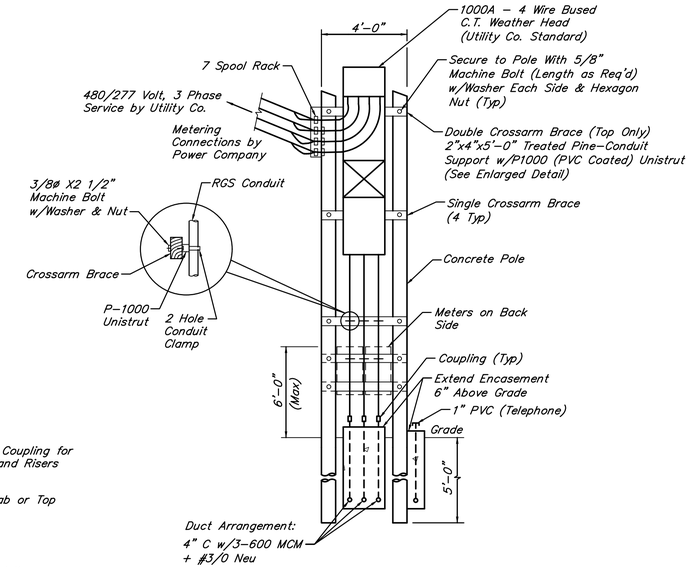

NOTE:

All hardware to be hot dip galvanized.

Service structure must meet Utility Co. service standards.

BUSSED WEATHERHEAD DETAIL

NOT TO SCALE

APPROVED: _____ F.B.C. DEVELOPMENT COORDINATOR

DATE: 5/21/18

NO.	DATE	REVISIONS	APP.
1	05/30/18	ISSUED FOR CONSTRUCTION	BSC

FORT BEND COUNTY M.U.D. No. 134E
FORT BEND COUNTY, TEXAS

JONES | CARTER
Texas Board of Professional Engineers Registration No. F-439
6330 West Loop South, Suite 150 • Bellaire, TX 77401 • 713.777.5337

HARVEST GREEN
WATER PLANT No. 1

ELECTRICAL DETAILS
SHEET 3 OF 3

NOTE: CITY SIGNATURES VALID FOR ONE YEAR ONLY AFTER DATE OF SIGNATURES

CITY OF HOUSTON
DEPARTMENT OF PUBLIC WORKS AND ENGINEERING

WATER	TRAFFIC & TRANSPORTATION
WASTEWATER	STORM WATER QUALITY
STORM	FACILITIES
STREET & BRIDGE	

FILE NO:
JOB NO: 13889-0002-00
DATE: April 2018
DGN. BY: KADOMINGUEZ
DWG. BY: JASTRUHAR
SCALE: NO SCALE

E15
SHEET No. 40 OF 47

FOR CITY OF HOUSTON USE ONLY
CITY DWG NO.

STATE OF TEXAS
BRIAN S. CHONG
106528
LICENSED
PROFESSIONAL ENGINEER
4-12-18

PUBLIC WORKS AND ENGINEERING
ACCEPTED AND FILED
60306
CITY DRAWING NUMBER
HOUSTON, TEXAS

ORIGINAL SCALE IN INCHES FOR REDUCED PLANS

CONFORMED DOCUMENTS

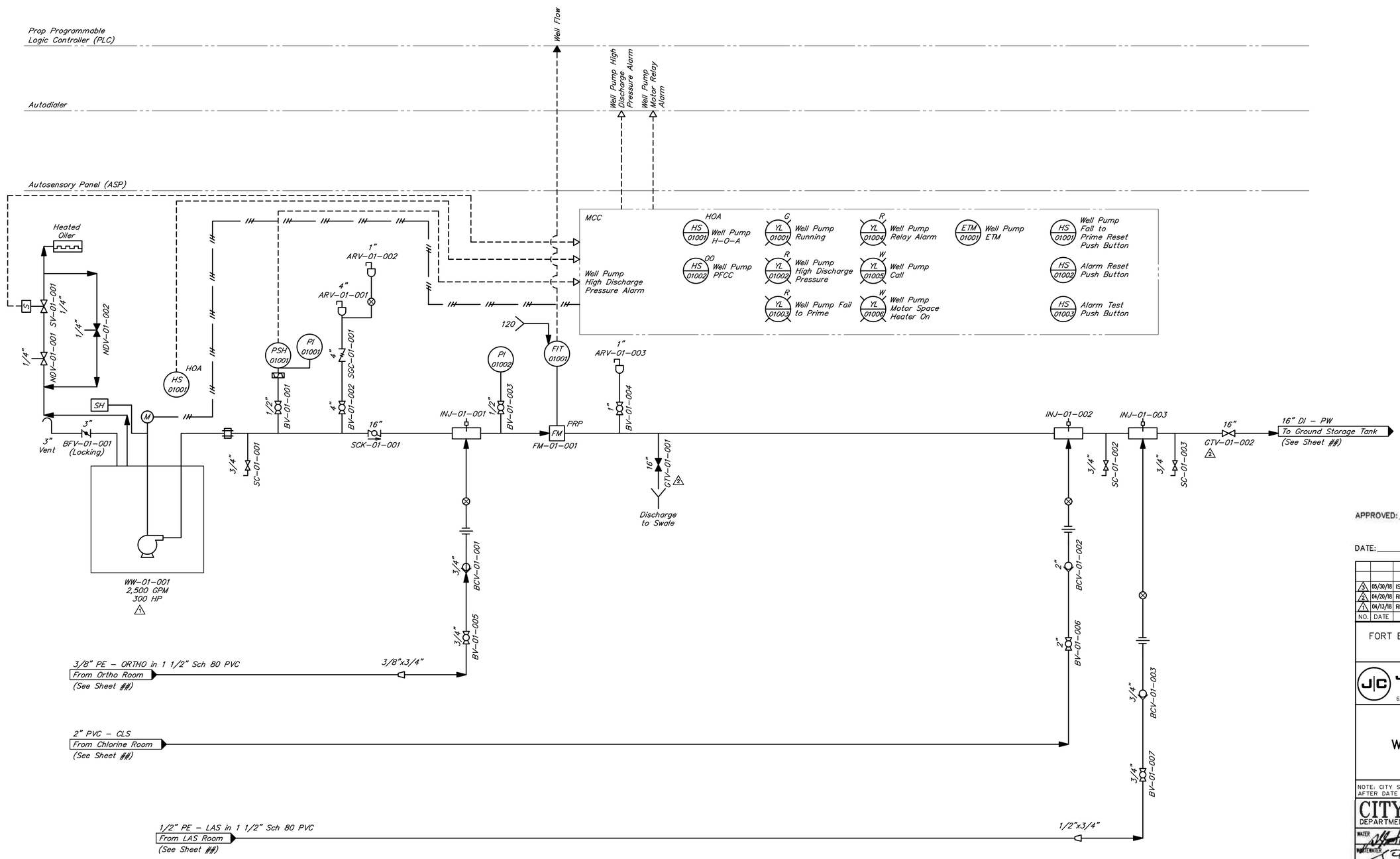

APPROVED: _____ F.B.C. DEVELOPMENT COORDINATOR

DATE: 5/21/18

NO.	DATE	REVISIONS	APP.
3	05/30/18	ISSUED FOR CONSTRUCTION	BSC
2	04/20/18	REVISIONS PER ADDENDUM No. 2	BSC
1	04/13/18	REVISIONS PER ADDENDUM No. 1	BSC

FORT BEND COUNTY M.U.D. No. 134E
FORT BEND COUNTY, TEXAS

JONES | CARTER
Texas Board of Professional Engineers Registration No. F-439
6330 West Loop South, Suite 150 • Bellaire, TX 77401 • 713.777.5337

HARVEST GREEN
WATER PLANT No. 1

WATER WELL No. 1 P&ID

NOTE: CITY SIGNATURES VALID FOR ONE YEAR ONLY AFTER DATE OF SIGNATURES

CITY OF HOUSTON
DEPARTMENT OF PUBLIC WORKS AND ENGINEERING

WATER	04/12/18	TRAFFIC & TRANSPORTATION	
WASTEWATER	4/12/18	STORM WATER QUALITY	
STORM		FACILITIES	04/12/18
STREET & BRIDGE			

FILE NO:
JOB NO: 13889-0002-00

DATE: April 2018
DGN. BY: KADOMINGUEZ
DWG. BY: JASTRUHAR

SCALE: NO SCALE

SHEET No. 41 OF 47

FOR CITY OF HOUSTON USE ONLY
CITY DWG NO.

APPROVED AND ISSUED
60306
CITY DRAWING NUMBER
HOUSTON, TEXAS

For Electrical & Process Work Only:

STATE OF TEXAS
BRIAN S. CHONG
108528
LICENSED PROFESSIONAL ENGINEER
4-12-18

STATE OF TEXAS
TOBY W. McOLEARY
93710
LICENSED PROFESSIONAL ENGINEER
4-12-2018

K:\13889\13889-0002-00 Water Plant No. 1\2 Design Phase\CAD\Plans\Archive\Conformed Dwgs\13889-0002 P&ID's\PID DWG\WATER WELL.dwg May 30,2018 – 3:11pm jrb

C.O.H. LOG No. 18-0447

COH BLK REV. JAN 2006

ORIGINAL SCALE IN INCHES FOR REDUCED PLANS

CONFORMED DOCUMENTS

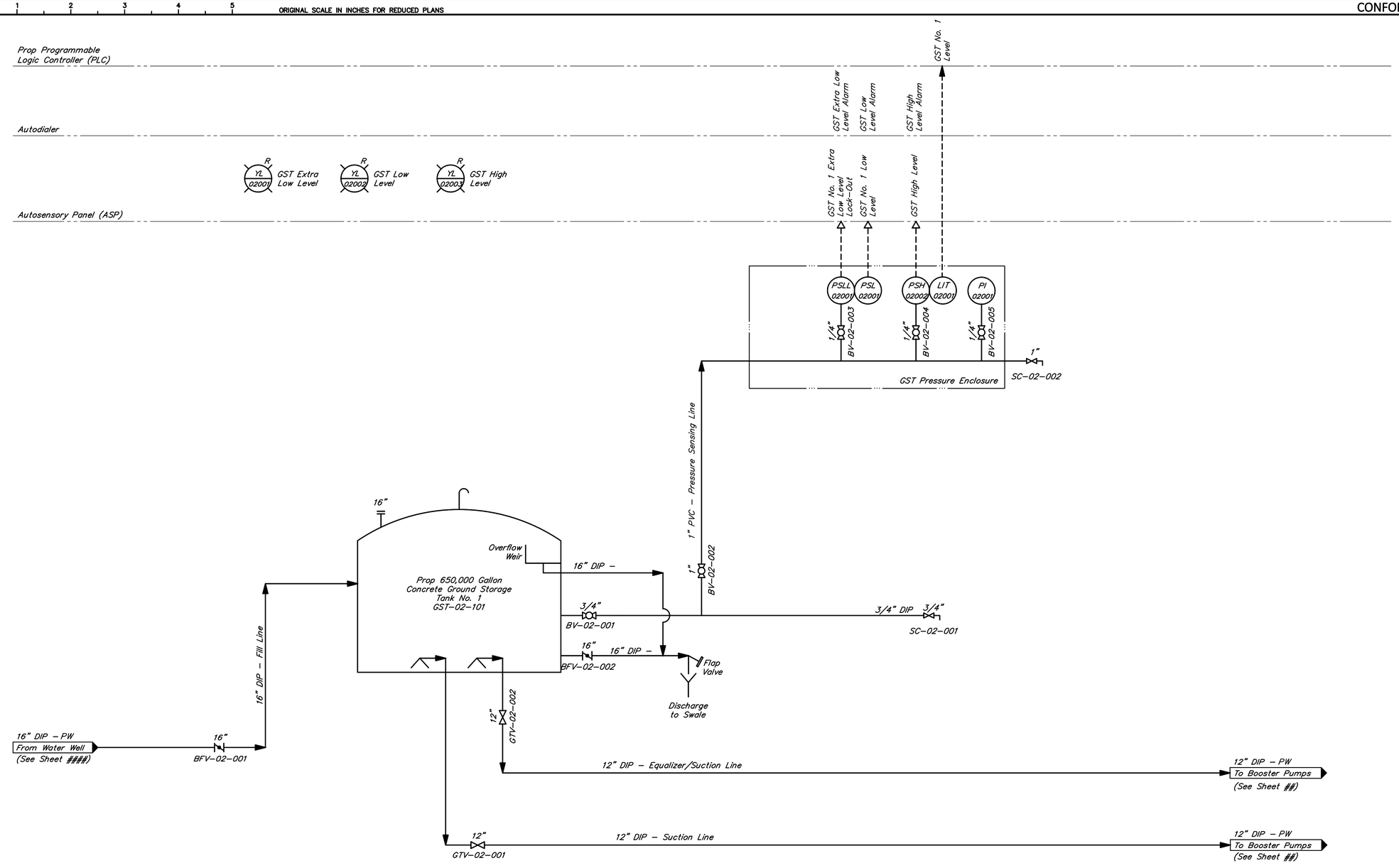

APPROVED: F.B.C. DEVELOPMENT COORDINATOR

DATE: 5/21/18

NO.	DATE	REVISIONS	APP.
1	05/30/18	ISSUED FOR CONSTRUCTION	BSC

FORT BEND COUNTY M.U.D. No. 134E
FORT BEND COUNTY, TEXAS

JONES | CARTER
Texas Board of Professional Engineers Registration No. F-439
6330 West Loop South, Suite 150 • Bellaire, TX 77401 • 713.777.5337

HARVEST GREEN
WATER PLANT No. 1

GROUND STORAGE TANK
P&ID

NOTE: CITY SIGNATURES VALID FOR ONE YEAR ONLY AFTER DATE OF SIGNATURES

CITY OF HOUSTON
DEPARTMENT OF PUBLIC WORKS AND ENGINEERING

WATER	04/12/18	TRAFFIC & TRANSPORTATION	
WASTEWATER	4/12/18	STORM WATER QUALITY	
STORM	4/12/18	FACILITIES	04/12/18
STREET & DRAINAGE			

For Electrical & Process Work Only:

STATE OF TEXAS — BRIAN S. CHONG — 108528 — LICENSED PROFESSIONAL ENGINEER

4-12-18

STATE OF TEXAS — TOBY W. McQUEARY — 93710 — LICENSED PROFESSIONAL ENGINEER

4-12-2018

FILE NO:
JOB NO: 13889-0002-00

DATE: April 2018
DGN. BY: KADOMINGUEZ
DWG. BY: JASTRUHAR

SCALE: NO SCALE

SHEET No. 42 OF 47

FOR CITY OF HOUSTON USE ONLY
CITY DWG NO.

PUBLIC WORKS & ENGINEERING — 60306 — CITY DRAWING NUMBER — HOUSTON, TEXAS

K:\13889\13889-0002-00 Water Plant No. 1\2 Design Phase\CAD\Plans\Archive\Conformed Dwgs\13889-0002 P&ID's\PID DWG\GST.dwg May 30,2018 - 3:11pm jrb

C.O.H. LOG No. 18-0447

COH BLK REV. JAN 2006

ORIGINAL SCALE IN INCHES FOR REDUCED PLANS

CONFORMED DOCUMENTS

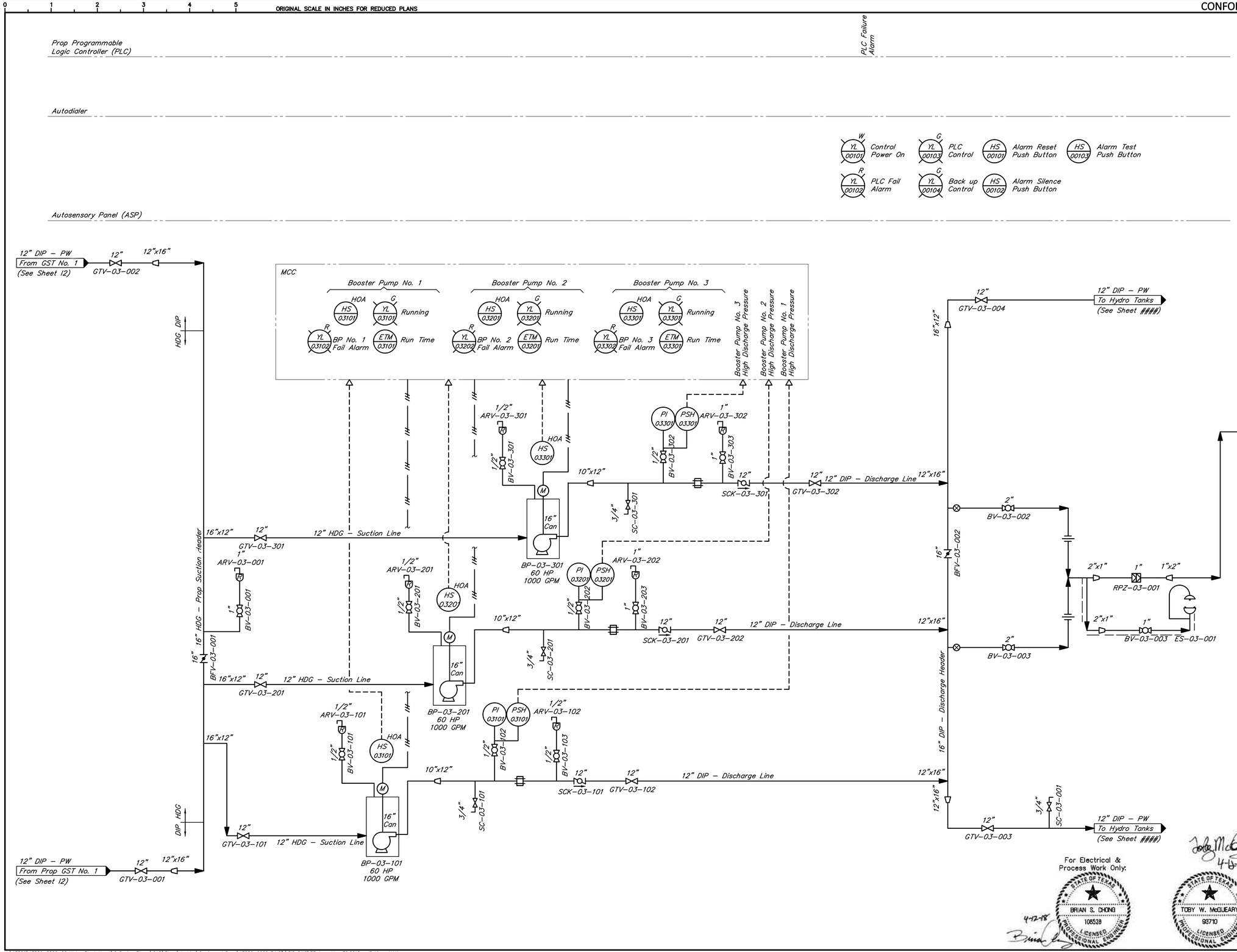

APPROVED: F.B.C. DEVELOPMENT COORDINATOR

DATE: 5/21/18

NO.	DATE	REVISIONS	APP.
1	05/30/18	ISSUED FOR CONSTRUCTION	BSC

FORT BEND COUNTY M.U.D. No. 134E
FORT BEND COUNTY, TEXAS

JONES | CARTER
Texas Board of Professional Engineers Registration No. F-439
6330 West Loop South, Suite 150 • Bellaire, TX 77401 • 713.777.5337

HARVEST GREEN
WATER PLANT No. 1

BOOSTER PUMPS
P&ID

NOTE: CITY SIGNATURES VALID FOR ONE YEAR ONLY AFTER DATE OF SIGNATURES

CITY OF HOUSTON
DEPARTMENT OF PUBLIC WORKS AND ENGINEERING

WATER 04/12/18 — TRAFFIC & TRANSPORTATION
WASTEWATER 4/12/18 — STORM WATER QUALITY
STORM 4/12/18 — FACILITIES 04/12/18
STREET & BRIDGE

FILE NO:
JOB NO: 13889-0002-00

FOR CITY OF HOUSTON USE ONLY
CITY DWG NO.

DATE: April 2018
DGN. BY: KADOMINGUEZ
DWG. BY: JASTRUHAR
SCALE: NO SCALE

PUBLIC WORKS AND ENGINEERING
60306
CITY DRAWING NUMBER
HOUSTON, TEXAS

13
SHEET No. 43 OF 47

For Electrical & Process Work Only:

STATE OF TEXAS
BRIAN S. CHONG
108528
LICENSED PROFESSIONAL ENGINEER
4-12-18

STATE OF TEXAS
TOBY W. McCLEARY
93710
LICENSED PROFESSIONAL ENGINEER
4-12-2018

K:\13889\13889-0002-00 Water Plant No. 1\2 Design Phase\CAD\Plans\Archive\Conformed Dwgs\13889-0002 P&ID's\PID DWG\BP.dwg May 30,2018 – 3:19pm MAK

C.O.H. LOG No. 18-0447

COH BLK REV. JAN 2006

ORIGINAL SCALE IN INCHES FOR REDUCED PLANS

CONFORMED DOCUMENTS

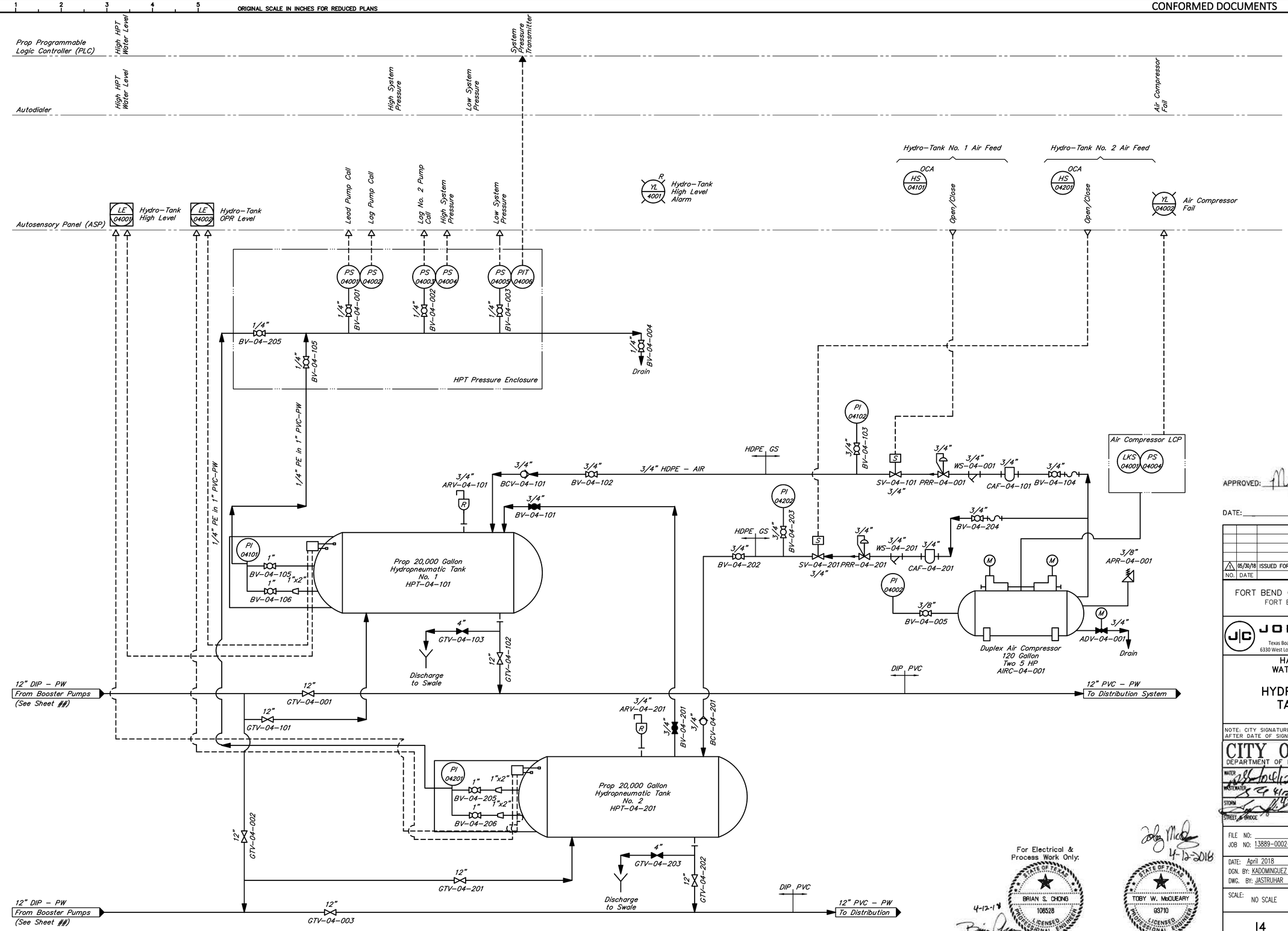

For Electrical & Process Work Only:

STATE OF TEXAS — BRIAN S. CHONG 106528 — LICENSED PROFESSIONAL ENGINEER — 4-12-18

STATE OF TEXAS — TOBY W. McQUEARY 93710 — LICENSED PROFESSIONAL ENGINEER — 4-12-2018

APPROVED: B.C. DEVELOPMENT COORDINATOR

DATE: 5/21/18

NO.	DATE	REVISIONS	APP.
1	05/30/18	ISSUED FOR CONSTRUCTION	BSC

FORT BEND COUNTY M.U.D. No. 134E
FORT BEND COUNTY, TEXAS

JONES | CARTER
Texas Board of Professional Engineers Registration No. F-439
6330 West Loop South, Suite 150 • Bellaire, TX 77401 • 713.777.5337

HARVEST GREEN
WATER PLANT No. 1

HYDROPNEUMATIC TANKS P&ID

NOTE: CITY SIGNATURES VALID FOR ONE YEAR ONLY AFTER DATE OF SIGNATURES

CITY OF HOUSTON
DEPARTMENT OF PUBLIC WORKS AND ENGINEERING

WATER — WASTEWATER — STORM — STREET & BRIDGE — TRAFFIC & TRANSPORTATION — STORM WATER QUALITY — FACILITIES

FILE NO:
JOB NO: 13889-0002-00
DATE: April 2018
DGN. BY: KADOMINGUEZ
DWG. BY: JASTRUHAR
SCALE: NO SCALE

FOR CITY OF HOUSTON USE ONLY
CITY DWG NO.

ACCEPTED AND FILED — PUBLIC WORKS AND ENGINEERING — 60306 — CITY DRAWING NUMBER — HOUSTON, TEXAS

SHEET No. 14 OF 44 OF 47

K:\13889\13889-0002-00 Water Plant No. 1\2 Design Phase\CAD\Plans\Archive\Conformed Dwgs\13889-0002 P&ID's\PID DWG\HT.dwg May 30,2018 - 3:20pm jrb

C.O.H. LOG No. 18-0447

COH BLK REV. JAN 2006

ORIGINAL SCALE IN INCHES FOR REDUCED PLANS

CONFORMED DOCUMENTS

NOTE:

1. All chlorine gas from chlorine solution and water piping to chlorine injectors shall be schedule 80 PVC with solvent-welded joints.

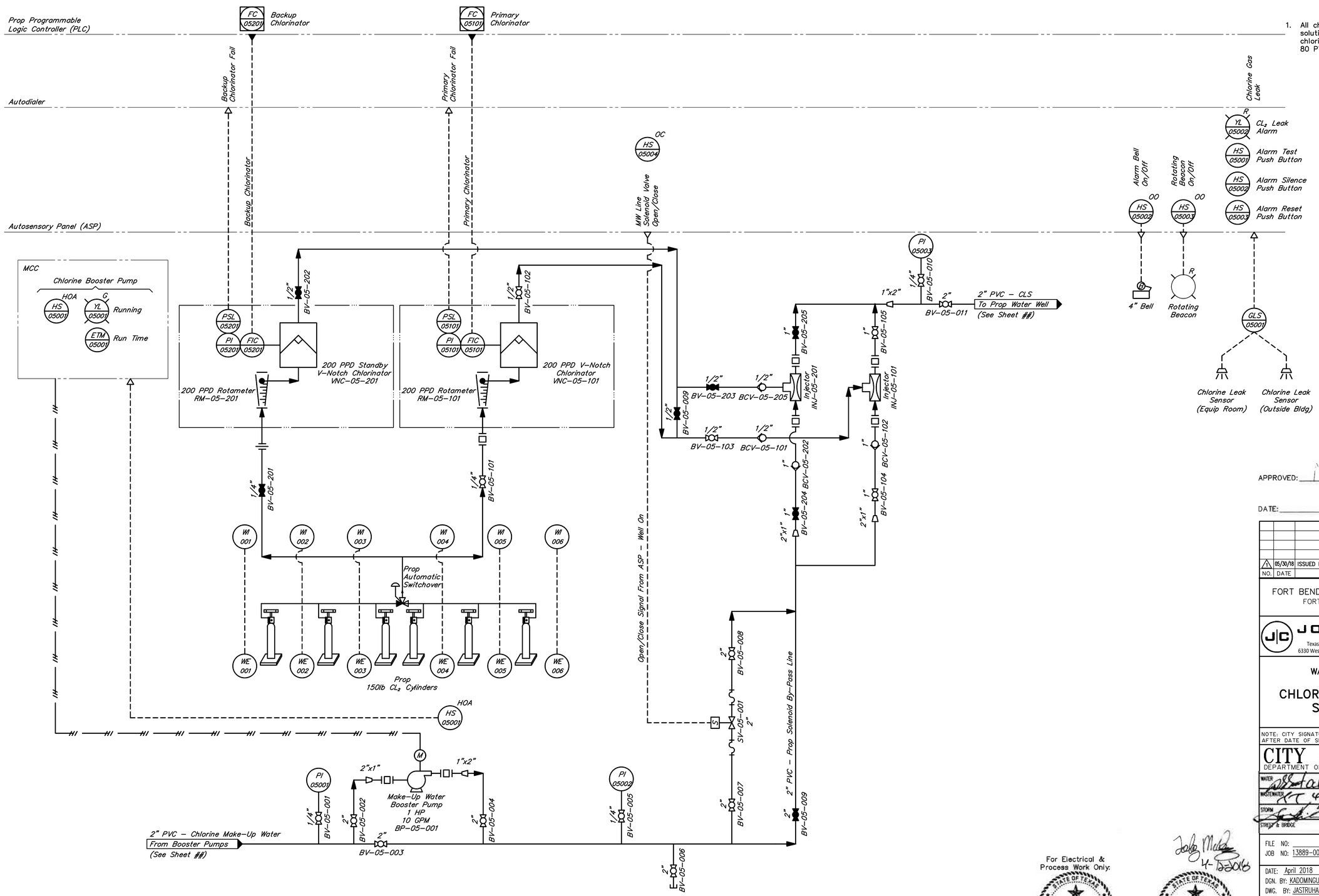

APPROVED: _____ P.E. DEVELOPMENT COORDINATOR

DATE: 5/21/18

NO.	DATE	REVISIONS	APP.
1	05/30/18	ISSUED FOR CONSTRUCTION	BSC

FORT BEND COUNTY M.U.D. No. 134E
FORT BEND COUNTY, TEXAS

JONES|CARTER
Texas Board of Professional Engineers Registration No. F-439
6330 West Loop South, Suite 150 • Bellaire, TX 77401 • 713.777.5337

HARVEST GREEN
WATER PLANT No. 1

CHLORINE DISINFECTION SYSTEM P&ID

NOTE: CITY SIGNATURES VALID FOR ONE YEAR ONLY AFTER DATE OF SIGNATURES

CITY OF HOUSTON
DEPARTMENT OF PUBLIC WORKS AND ENGINEERING

WATER	4/12/18	TRAFFIC & TRANSPORTATION	
WASTEWATER	4/12/18	STORM WATER QUALITY	
STORM	4-12-18	FACILITIES	4/12/18
STREET & BRIDGE			

FILE NO:
JOB NO: 13889-0002-00

DATE: April 2018
DGN. BY: KADOMINGUEZ
DWG. BY: JASTRUHAR

SCALE: NO SCALE

SHEET No. 15 OF 47

FOR CITY OF HOUSTON USE ONLY
CITY DWG NO.

PUBLIC WORKS AND ENGINEERING
ACCEPTED AND FILED
60306
CITY DRAWING NUMBER
HOUSTON, TEXAS

For Electrical & Process Work Only:

STATE OF TEXAS
BRIAN S. CHONG
108528
LICENSED
PROFESSIONAL ENGINEER
4-12-18

STATE OF TEXAS
TOBY W. McQUEARY
83710
LICENSED
PROFESSIONAL ENGINEER
4-12-2018

K:\13889\13889-0002-00 Water Plant No. 1\2 Design Phase\CAD\Plans\Archive\Conformed Dwgs\13889-0002 P&ID's\PID DWG\DISINF.dwg May 30,2018 - 3:21pm jrb

C.O.H. LOG No. 18-0447

COH BLK REV. JAN 2006

ORIGINAL SCALE IN INCHES FOR REDUCED PLANS

CONFORMED DOCUMENTS

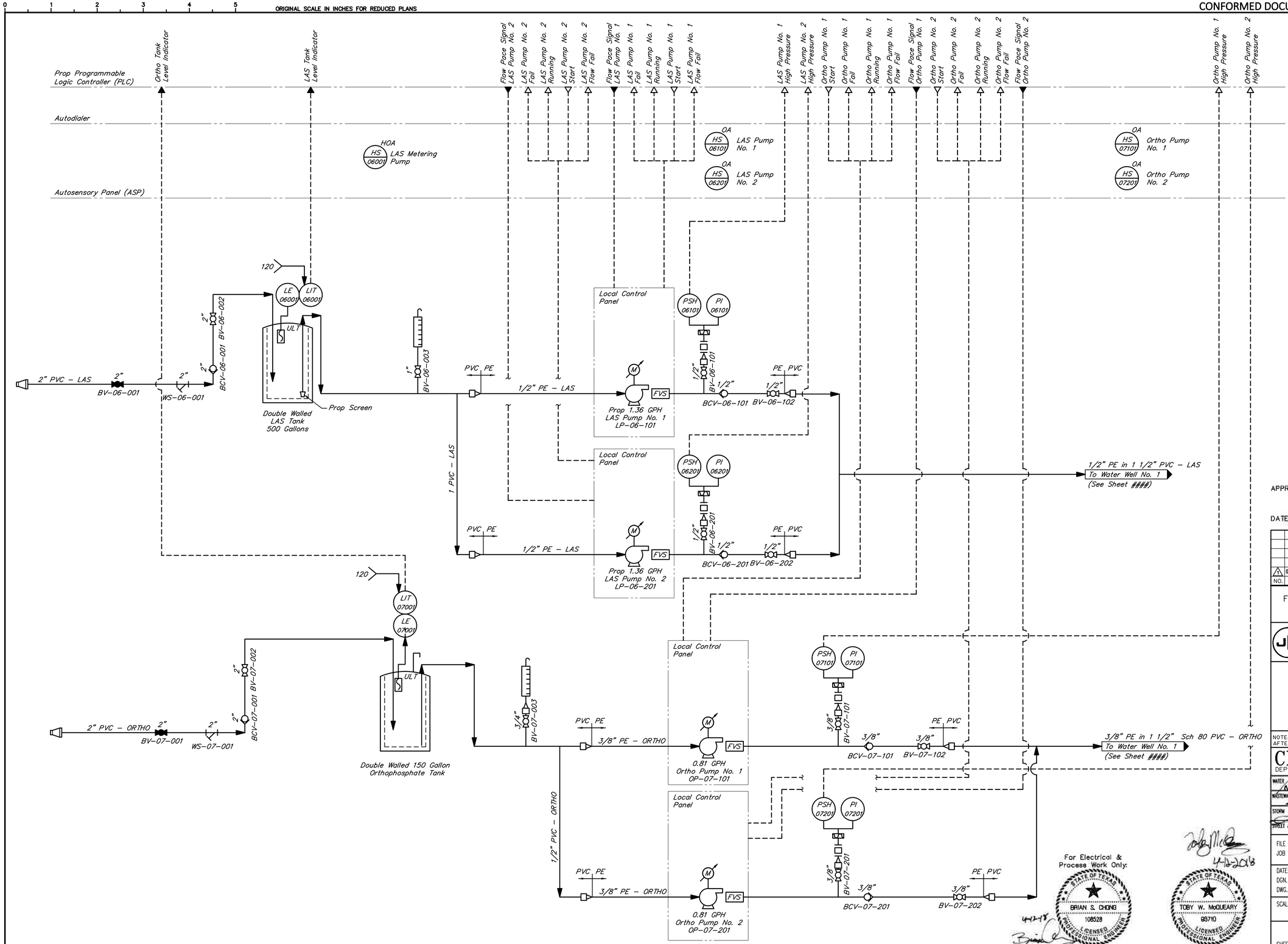

APPROVED: F.B.C. DEVELOPMENT COORDINATOR

DATE: 5/21/18

NO.	DATE	REVISIONS	APP.
1	05/30/18	ISSUED FOR CONSTRUCTION	BSC

FORT BEND COUNTY M.U.D. No. 134E
FORT BEND COUNTY, TEXAS

JONES | CARTER
Texas Board of Professional Engineers Registration No. F-439
6330 West Loop South, Suite 150 • Bellaire, TX 77401 • 713.777.5337

HARVEST GREEN
WATER PLANT No. 1

CHEMICAL FEED SYSTEMS P&ID

NOTE: CITY SIGNATURES VALID FOR ONE YEAR ONLY AFTER DATE OF SIGNATURES

CITY OF HOUSTON
DEPARTMENT OF PUBLIC WORKS AND ENGINEERING

WATER 4/12/18 | TRAFFIC & TRANSPORTATION
WASTEWATER 4/12/18 | STORM WATER QUALITY
STORM 4/12/18 | FACILITIES 4/12/18
STREET & BRIDGE

FILE NO:
JOB NO: 13889-0002-00
DATE: April 2018
DGN. BY: KADOMINGUEZ
DWG. BY: JASTRUHAR
SCALE: NO SCALE

FOR CITY OF HOUSTON USE ONLY
CITY DWG NO.

PUBLIC WORKS AND ENGINEERING
ACCEPTED AND FILED
60306
CITY DRAWING NUMBER
HOUSTON, TEXAS

For Electrical & Process Work Only:
STATE OF TEXAS
BRIAN S. CHONG
108528
LICENSED PROFESSIONAL ENGINEER
4-12-18

STATE OF TEXAS
TOBY W. McQUEARY
93710
LICENSED PROFESSIONAL ENGINEER
4-12-2018

SHEET No. 46 OF 47

K:\13889\13889-0002-00 Water Plant No. 1\2 Design Phase\CAD\Plans\Archive\Conformed Dwgs\13889-0002 P&ID's\PID DWG\CHEMF.dwg May 30,2018 – 3:22pm jrb

C.O.H. LOG No. 18-0447

COH BLK REV. JAN 2006

ORIGINAL SCALE IN INCHES FOR REDUCED PLANS

CONFORMED DOCUMENTS

0 30 90 150 300 450

SCALE: 1" = 150'

APPROVED: _____ H.B.C. DEVELOPMENT COORDINATOR

DATE: 5/21/18

NO.	DATE	REVISIONS	APP.
1	05/30/18	ISSUED FOR CONSTRUCTION	TWM

FORT BEND COUNTY M.U.D. No. 134E
FORT BEND COUNTY, TEXAS

JONES | CARTER
Texas Board of Professional Engineers Registration No. F-439
6330 West Loop South, Suite 150 • Bellaire, TX 77401 • 713.777.5337

HARVEST GREEN
WATER PLANT No. 1

ONE-QUARTER MILE RADIUS WATER WELL LOCATION MAP

NOTE: CITY SIGNATURES VALID FOR ONE YEAR ONLY AFTER DATE OF SIGNATURES

CITY OF HOUSTON
DEPARTMENT OF PUBLIC WORKS AND ENGINEERING

WATER 6-5-18	TRAFFIC & TRANSPORTATION
WASTEWATER 6-4-18	STORM WATER QUALITY
STORM STREET & BRIDGE 6-5-18	FACILITIES 6-4-18

FILE NO:
JOB NO: 13889-0002-00

DATE: April 2018
DGN. BY: MRKILLARY
DWG. BY: JASTRUHAR

SCALE: 1" = 150'

01
SHEET No. 47 OF 47

FOR CITY OF HOUSTON USE ONLY
CITY DWG NO.

60306

4-6-2018

STATE OF TEXAS
TOBY W. McQUEARY
98710
LICENSED PROFESSIONAL ENGINEER

K:\13889\13889-0002-00 Water Plant No. 1\2 Design Phase\CAD\Plans\Archive\Conformed Dwgs\LOCATION MAP.dwg May 30,2018 – 3:30pm jrb

C.O.H. LOG No. 18-0447

COH BLK REV. JAN 2006

DISCLAIMER:
The use of this standard is governed by the "Texas Engineering Practice Act". No warranty of any kind is made by TxDOT for any purpose whatsoever. TxDOT assumes no responsibility for the conversion of this standard to other formats or for incorrect results or damages resulting from its use.

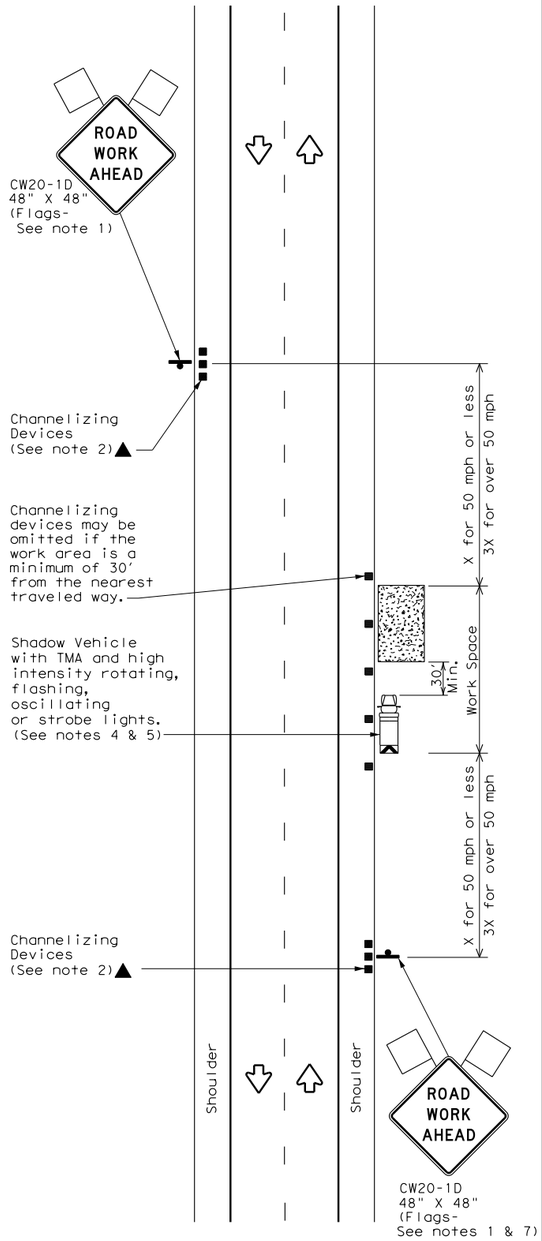

TCP (1-1a)

WORK SPACE NEAR SHOULDER

Conventional Roads

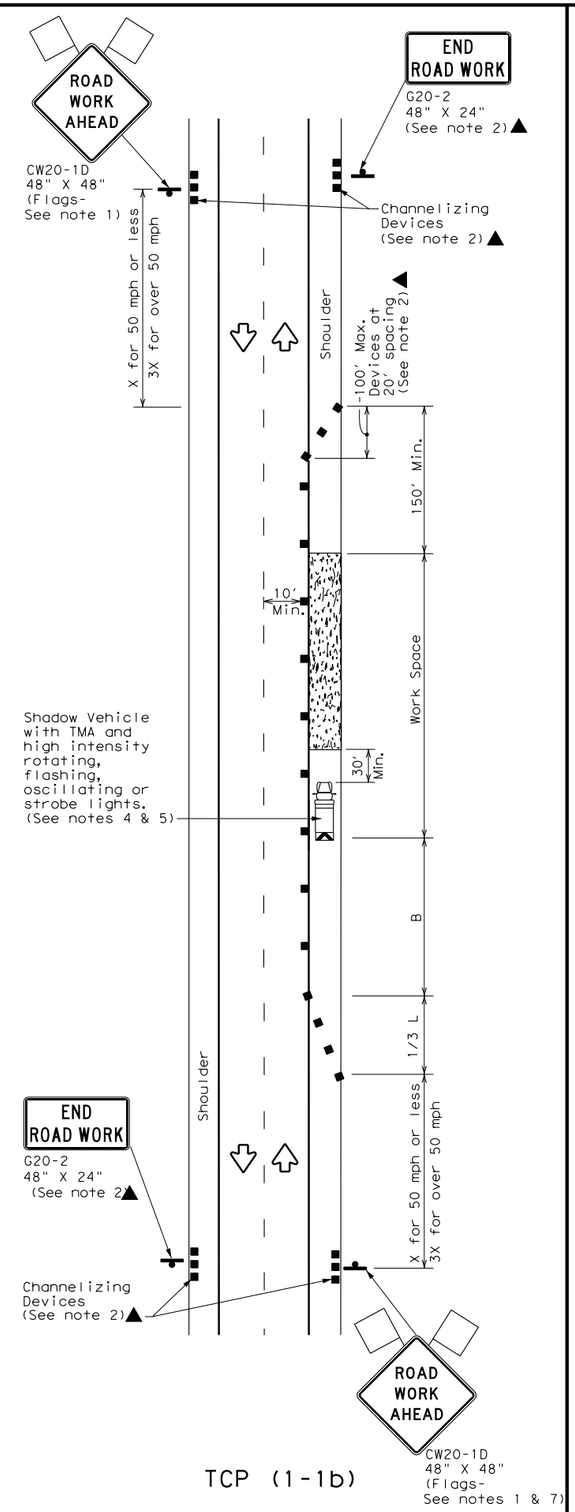

TCP (1-1b)

WORK SPACE ON SHOULDER

Conventional Roads

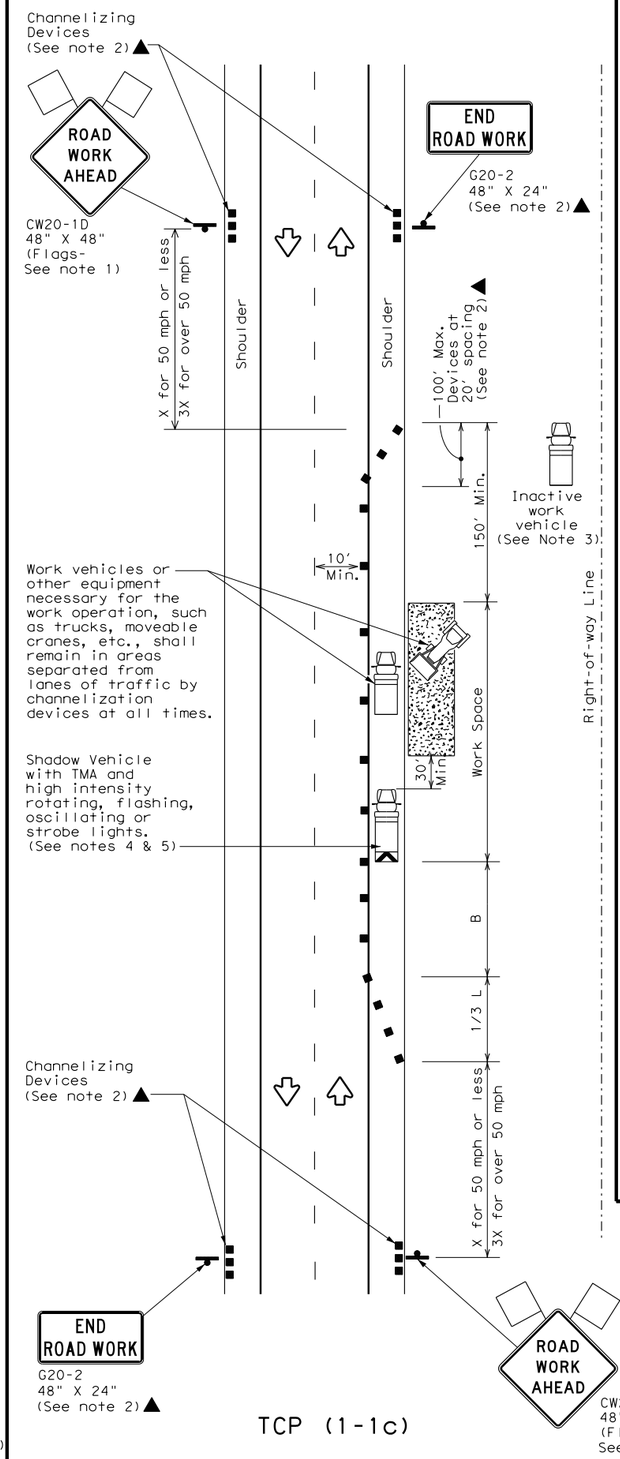

TCP (1-1c)

WORK VEHICLES ON SHOULDER

Conventional Roads

LEGEND			
	Type 3 Barricade		Channelizing Devices
	Heavy Work Vehicle		Truck Mounted Attenuator (TMA)
	Trailer Mounted Flashing Arrow Board		Portable Changeable Message Sign (PCMS)
	Sign		Traffic Flow
	Flag		Flagger

Posted Speed ✱	Formula	Minimum Desirable Taper Lengths ✱✱			Suggested Maximum Spacing of Channelizing Devices		Minimum Sign Spacing "X" Distance	Suggested Longitudinal Buffer Space "B"
		10' Offset	11' Offset	12' Offset	On a Taper	On a Tangent		
30	$L = \frac{WS^2}{60}$	150'	165'	180'	30'	60'	120'	90'
35		205'	225'	245'	35'	70'	160'	120'
40		265'	295'	320'	40'	80'	240'	155'
45	L = WS	450'	495'	540'	45'	90'	320'	195'
50		500'	550'	600'	50'	100'	400'	240'
55		550'	605'	660'	55'	110'	500'	295'
60		600'	660'	720'	60'	120'	600'	350'
65		650'	715'	780'	65'	130'	700'	410'
70		700'	770'	840'	70'	140'	800'	475'
75		750'	825'	900'	75'	150'	900'	540'

✱ Conventional Roads Only
✱✱ Taper lengths have been rounded off.
L=Length of Taper(FT) W=Width of Offset(FT) S=Posted Speed(MPH)

TYPICAL USAGE				
MOBILE	SHORT DURATION	SHORT TERM STATIONARY	INTERMEDIATE TERM STATIONARY	LONG TERM STATIONARY
	✓	✓		

GENERAL NOTES

1. Flags attached to signs where shown are REQUIRED.
2. All traffic control devices illustrated are REQUIRED, except those denoted with the triangle symbol may be omitted when stated elsewhere in the plans, or for routine maintenance work, when approved by the Engineer.
3. Inactive work vehicles or other equipment should be parked near the right-of-way line and not parked on the paved shoulder.
4. A Shadow Vehicle with a TMA should be used anytime it can be positioned 30 to 100 feet in advance of the area of crew exposure without adversely affecting the performance or quality of the work. If workers are no longer present but road or work conditions require the traffic control to remain in place, Type 3 Barricades or other channelizing devices may be substituted for the Shadow Vehicle and TMA.
5. Additional Shadow Vehicles with TMAs may be positioned off the paved surface, next to those shown in order to protect wider work spaces.
6. See TCP(5-1)for shoulder work on divided highways, expressways and freeways.
7. CW21-5 "SHOULDER WORK" signs may be used in place of CW20-1D "ROAD WORK AHEAD" signs for shoulder work on conventional roadways.

Texas Department of Transportation

Traffic Operations Division Standard

TRAFFIC CONTROL PLAN CONVENTIONAL ROAD SHOULDER WORK

TCP(1-1)-18

FILE: tcp1-1-18.dgn	DN:	CK:	DW:	CK:
©TxDOT December 1985	CONT	SECT	JOB	HIGHWAY
REVISIONS 2-94 4-98 8-95 2-12 1-97 2-18	DIST		COUNTY	SHEET NO.

DATE:
FILE:

DISCLAIMER:
The use of this standard is governed by the "Texas Engineering Practice Act". No warranty of any kind is made by TxDOT for any purpose whatsoever. TxDOT assumes no responsibility for the conversion of this standard to other formats or for incorrect results or damages resulting from its use.

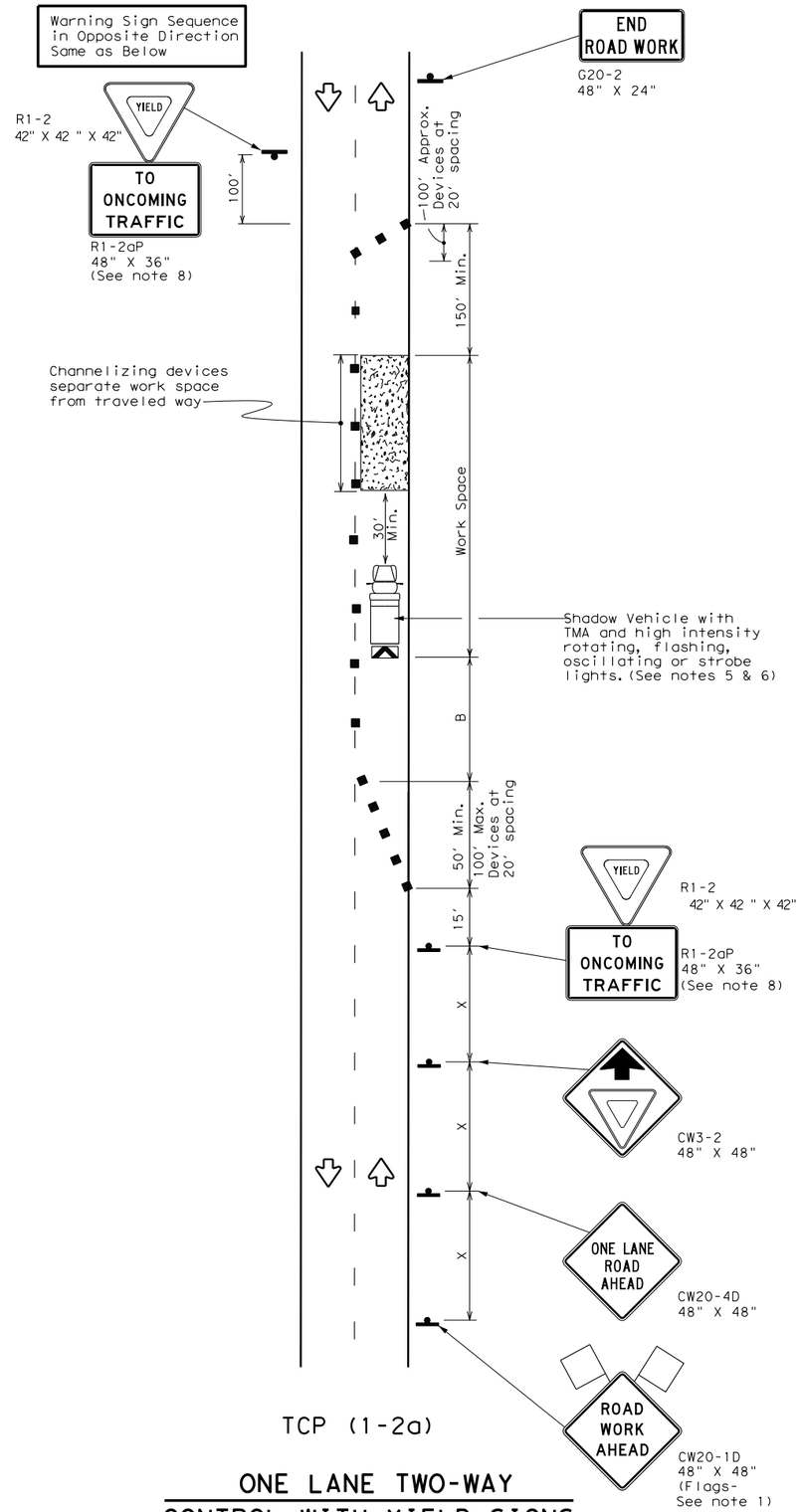

TCP (1-2a)

ONE LANE TWO-WAY CONTROL WITH YIELD SIGNS

(Less than 2000 ADT - See note 7)

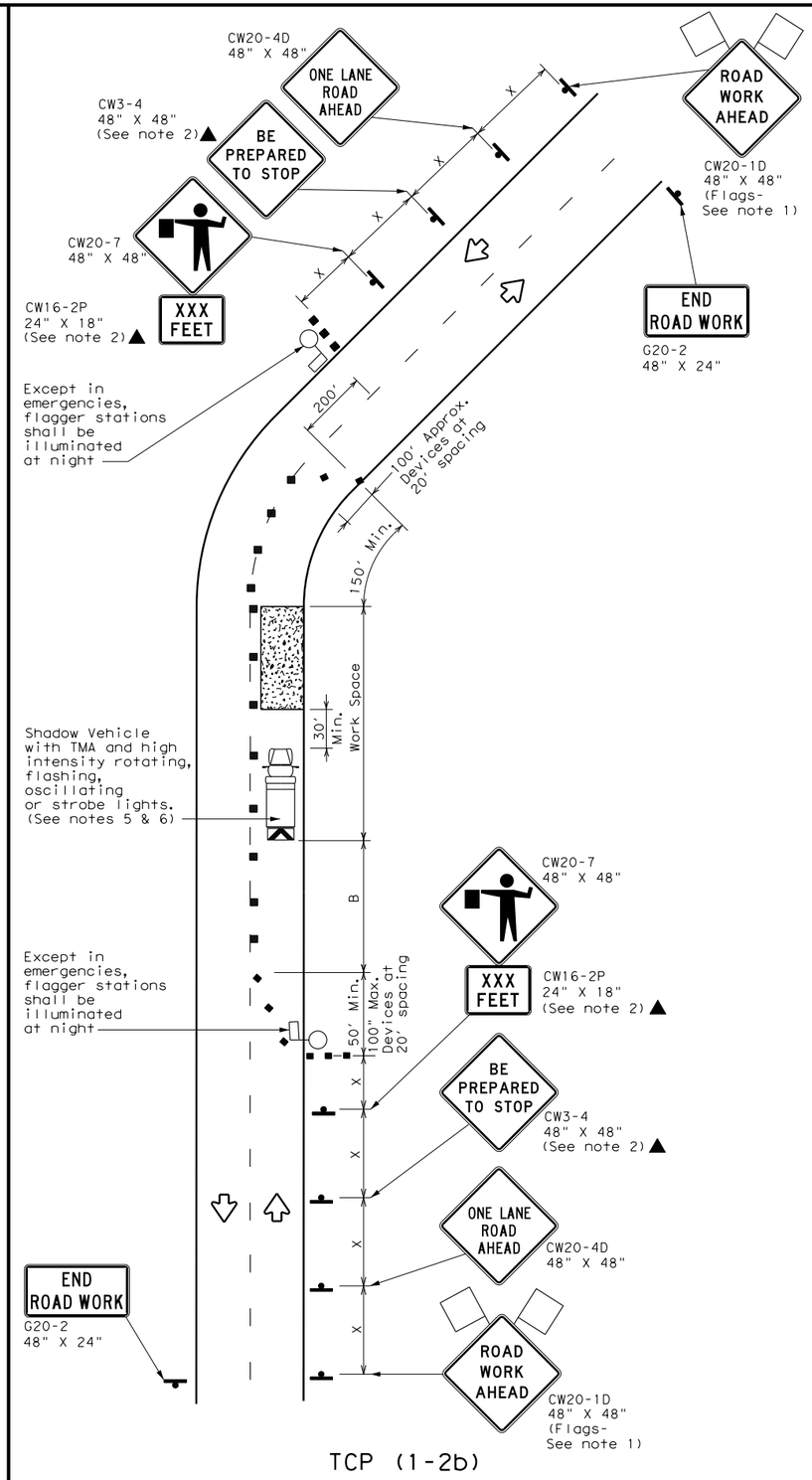

TCP (1-2b)

ONE LANE TWO-WAY CONTROL WITH FLAGGERS

LEGEND

	Type 3 Barricade		Channelizing Devices
	Heavy Work Vehicle		Truck Mounted Attenuator (TMA)
	Trailer Mounted Flashing Arrow Board	M	Portable Changeable Message Sign (PCMS)
	Sign		Traffic Flow
	Flag		Flagger

Posted Speed ✳	Formula	Minimum Desirable Taper Lengths ✳✳ 10' Offset	11' Offset	12' Offset	Suggested Maximum Spacing of Channelizing Devices On a Taper	On a Tangent	Minimum Sign Spacing "X" Distance	Suggested Longitudinal Buffer Space "B"	Stopping Sight Distance
30	$L = \frac{WS^2}{60}$	150'	165'	180'	30'	60'	120'	90'	200'
35		205'	225'	245'	35'	70'	160'	120'	250'
40		265'	295'	320'	40'	80'	240'	155'	305'
45	L = WS	450'	495'	540'	45'	90'	320'	195'	360'
50		500'	550'	600'	50'	100'	400'	240'	425'
55		550'	605'	660'	55'	110'	500'	295'	495'
60		600'	660'	720'	60'	120'	600'	350'	570'
65		650'	715'	780'	65'	130'	700'	410'	645'
70		700'	770'	840'	70'	140'	800'	475'	730'
75		750'	825'	900'	75'	150'	900'	540'	820'

✳ Conventional Roads Only
✳✳ Taper lengths have been rounded off.
L=Length of Taper(FT) W=Width of Offset(FT) S=Posted Speed(MPH)

TYPICAL USAGE

MOBILE	SHORT DURATION	SHORT TERM STATIONARY	INTERMEDIATE TERM STATIONARY	LONG TERM STATIONARY
	✓	✓		

GENERAL NOTES

1. Flags attached to signs where shown are REQUIRED.
2. All traffic control devices illustrated are REQUIRED, except those denoted with the triangle symbol may be omitted when stated elsewhere in the plans, or for routine maintenance work, when approved by the Engineer.
3. The CW3-4 "BE PREPARED TO STOP" sign may be installed after the CW20-4D "ONE LANE ROAD AHEAD" sign, but proper sign spacing shall be maintained.
4. Sign spacing may be increased or an additional CW20-1D "ROAD WORK AHEAD" sign may be used if advance warning ahead of the flagger or R1-2 "YIELD" sign is less than 1500 feet.
5. A Shadow Vehicle with a TMA should be used anytime it can be positioned 30 to 100 feet in advance of the area of crew exposure without adversely affecting the performance or quality of the work. If workers are no longer present but road or work conditions require the traffic control to remain in place, Type 3 Barricades or other channelizing devices may be substituted for the Shadow Vehicle and TMA.
6. Additional Shadow Vehicles with TMAs may be positioned off the paved surface, next to those shown in order to protect wider work spaces.

TCP (1-2a)

7. R1-2 "YIELD" sign traffic control may be used on projects with approaches that have adequate sight distance. For projects in urban areas, work spaces should be no longer than one half city block. In rural areas on roadways with less than 2000 ADT, work spaces should be no longer than 400 feet.
8. R1-2 "YIELD" sign with R1-2aP "TO ONCOMING TRAFFIC" plaque shall be placed on a support at a 7 foot minimum mounting height.

TCP (1-2b)

9. Flaggers should use two-way radios or other methods of communication to control traffic.
10. Length of work space should be based on the ability of flaggers to communicate.
11. If the work space is located near a horizontal or vertical curve, the buffer distances should be increased in order to maintain adequate stopping sight distance to the flagger and a queue of stopped vehicles (see table above).
12. Channelizing devices on the center-line may be omitted when a pilot car is leading traffic and approved by the Engineer.
13. Flaggers should use 24" STOP/SLOW paddles to control traffic. Flags should be limited to emergency situations.

Texas Department of Transportation — Traffic Operations Division Standard

TRAFFIC CONTROL PLAN ONE-LANE TWO-WAY TRAFFIC CONTROL

TCP(1-2)-18

FILE: tcp1-2-18.dgn	DN:	CK:	DW:	CK:
©TxDOT December 1985	CONT	SECT	JOB	HIGHWAY
REVISIONS 4-90 4-98 2-94 2-12 1-97 2-18	DIST	COUNTY		SHEET NO.

DATE:
FILE:

DISCLAIMER:
The use of this standard is governed by the "Texas Engineering Practice Act". No warranty of any kind is made by TxDOT for any purpose whatsoever. TxDOT assumes no responsibility for the conversion of this standard to other formats or for incorrect results or damages resulting from its use.

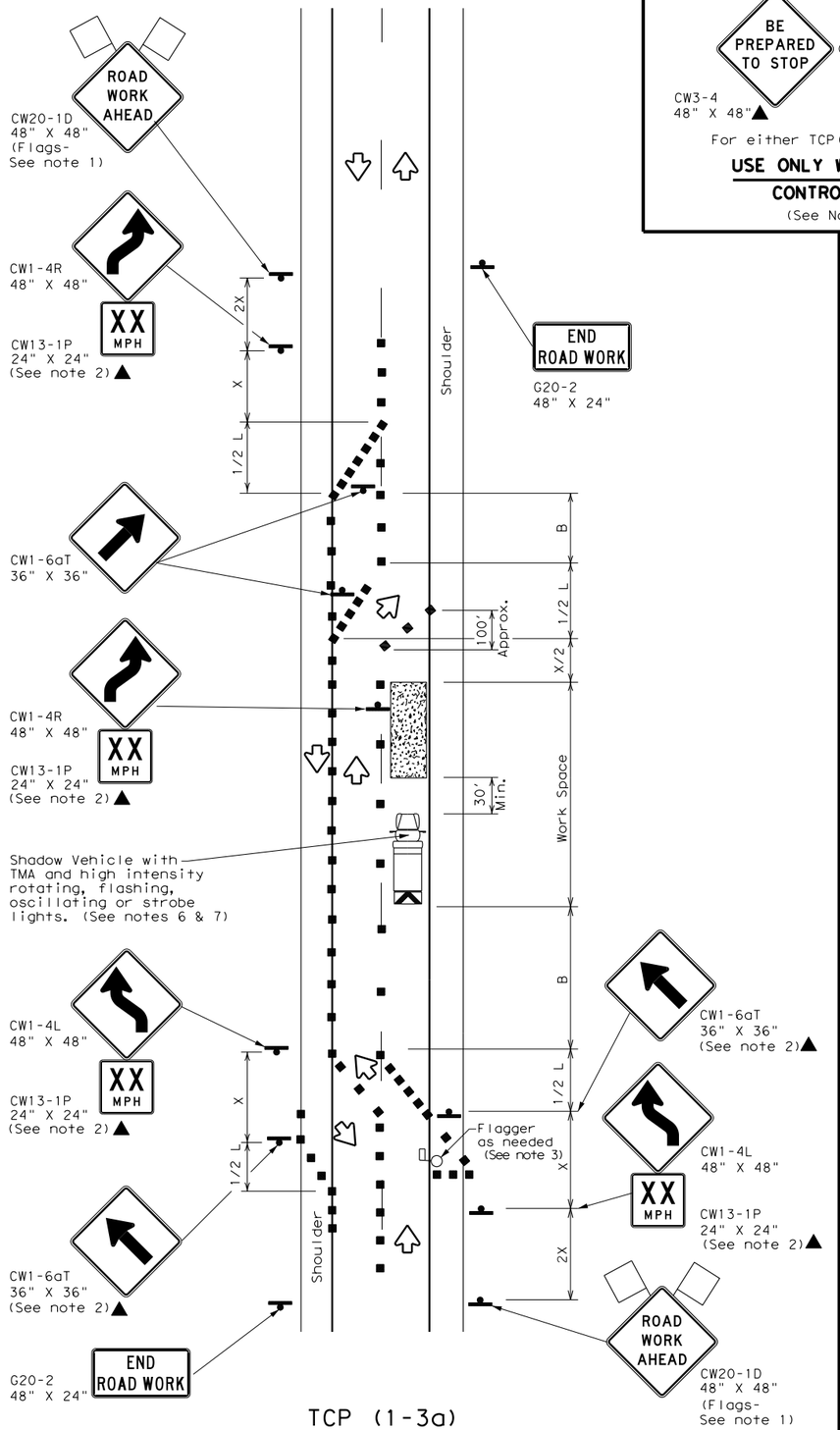

TCP (1-3a)
2-LANE ROADWAY WITH PAVED SHOULDERS

ONE LANE CLOSED
ADEQUATE FIELD OF VIEW

For either TCP(1-3a) or TCP(1-3b)

USE ONLY WHEN FLAGGERS CONTROL TRAFFIC

(See Notes 2 & 3)

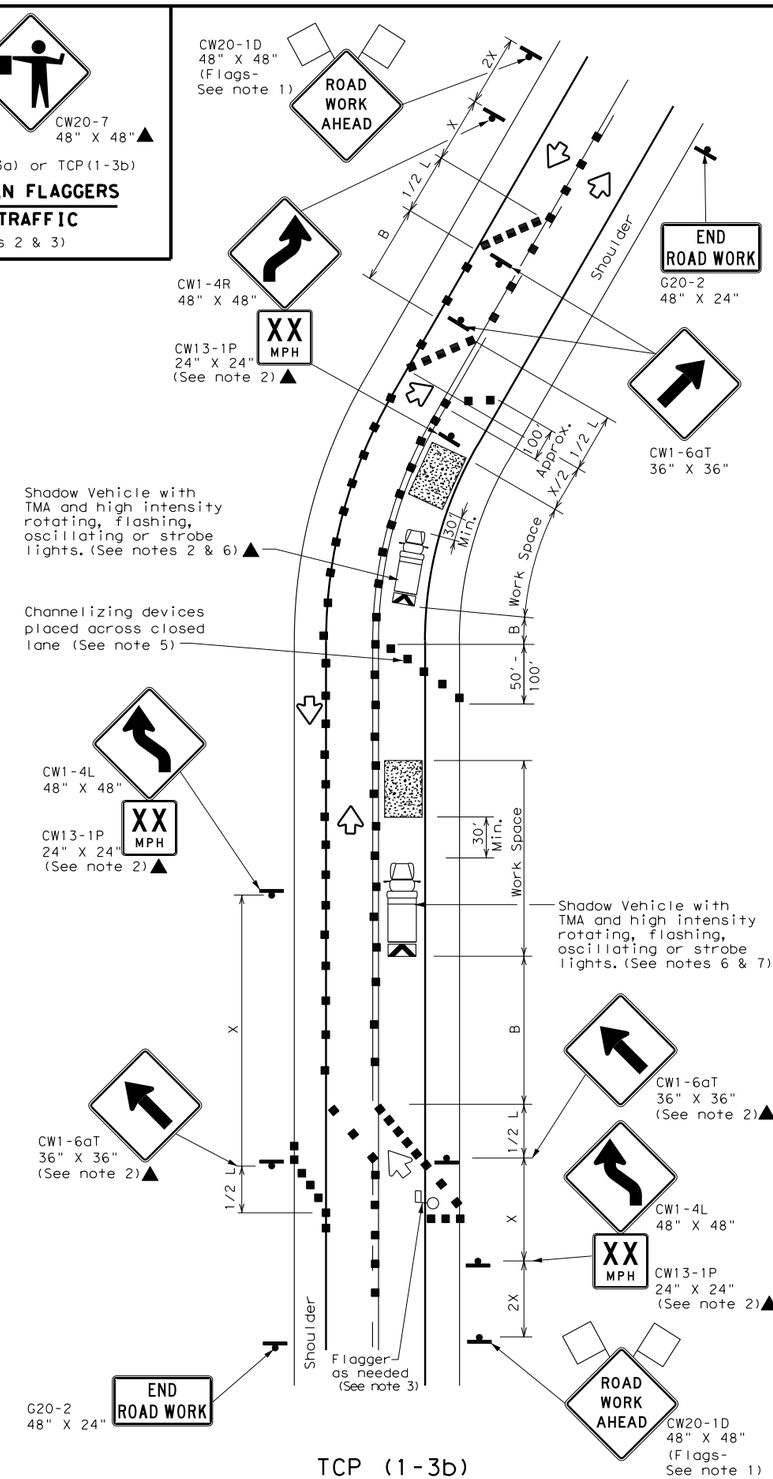

TCP (1-3b)
2-LANE ROADWAY WITH PAVED SHOULDERS

ONE LANE CLOSED
INADEQUATE FIELD OF VIEW

LEGEND

	Type 3 Barricade		Channelizing Devices
	Heavy Work Vehicle		Truck Mounted Attenuator (TMA)
	Trailer Mounted Flashing Arrow Board		Portable Changeable Message Sign (PCMS)
	Sign		Traffic Flow
	Flag		Flagger

Posted Speed *	Formula	Minimum Desirable Taper Lengths ** 10' Offset	11' Offset	12' Offset	Suggested Maximum Spacing of Channelizing Devices On a Taper	On a Tangent	Minimum Sign Spacing "X" Distance	Suggested Longitudinal Buffer Space "B"
30	$L = \frac{WS^2}{60}$	150'	165'	180'	30'	60'	120'	90'
35		205'	225'	245'	35'	70'	160'	120'
40		265'	295'	320'	40'	80'	240'	155'
45	L = WS	450'	495'	540'	45'	90'	320'	195'
50		500'	550'	600'	50'	100'	400'	240'
55		550'	605'	660'	55'	110'	500'	295'
60		600'	660'	720'	60'	120'	600'	350'
65		650'	715'	780'	65'	130'	700'	410'
70		700'	770'	840'	70'	140'	800'	475'
75		750'	825'	900'	75'	150'	900'	540'

* Conventional Roads Only
** Taper lengths have been rounded off.
L=Length of Taper(FT) W=Width of Offset(FT) S=Posted Speed(MPH)

TYPICAL USAGE

MOBILE	SHORT DURATION	SHORT TERM STATIONARY	INTERMEDIATE TERM STATIONARY	LONG TERM STATIONARY
	✓	✓		

GENERAL NOTES

1. Flags attached to signs where shown are REQUIRED.
2. All traffic control devices illustrated are REQUIRED, except those denoted with the triangle symbol may be omitted when stated elsewhere in the plans, or for routine maintenance work, when approved by the Engineer.
3. Flagger control should NOT be used unless roadway conditions or heavy traffic volume require additional emphasis to safely control traffic. Additional flaggers may be positioned in advance of traffic queues to alert traffic to reduce speed.
4. DO NOT PASS, PASS WITH CARE and construction regulatory speed zone signs may be installed downstream of the ROAD WORK AHEAD signs.
5. When the work zone is made up of several work spaces, channelizing devices should be placed laterally across the closed lane to re-emphasize closure. Laterally placed channelizing devices should be repeated every 500 to 1000 feet in urban areas and every 1/4 to 1/2 mile in rural areas.
6. A Shadow Vehicle with a TMA should be used anytime it can be positioned 30 to 100 feet in advance of the area of crew exposure without adversely affecting the performance or quality of the work. If workers are no longer present but road or work conditions require the traffic control to remain in place, Type 3 Barricades or other channelizing devices may be substituted for the Shadow Vehicle and TMA.
7. Additional Shadow Vehicles with TMAs may be positioned off the paved surface, next to those shown in order to protect wider work spaces.
8. Where traffic is directed over a yellow centerline, channelizing devices which separate two-way traffic should be spaced on tapers at 20', or 15' if posted speed are 35 mph or slower, and for tangent sections, at 1/2S where S is the speed in mph. This tighter device spacing is intended for the area of conflicting markings not the entire work zone.

Texas Department of Transportation — Traffic Operations Division Standard

TRAFFIC CONTROL PLAN TRAFFIC SHIFTS ON TWO LANE ROADS

TCP(1-3)-18

FILE: tcp1-3-18.dgn	DN:	CK:	DW:	CK:
©TxDOT December 1985	CONT	SECT	JOB	HIGHWAY
REVISIONS 2-94 4-98 8-95 2-12 1-97 2-18	DIST		COUNTY	SHEET NO.

DATE:
FILE:

DISCLAIMER:
The use of this standard is governed by the "Texas Engineering Practice Act". No warranty of any kind is made by TxDOT for any purpose whatsoever. TxDOT assumes no responsibility for the conversion of this standard to other formats or for incorrect results or damages resulting from its use.

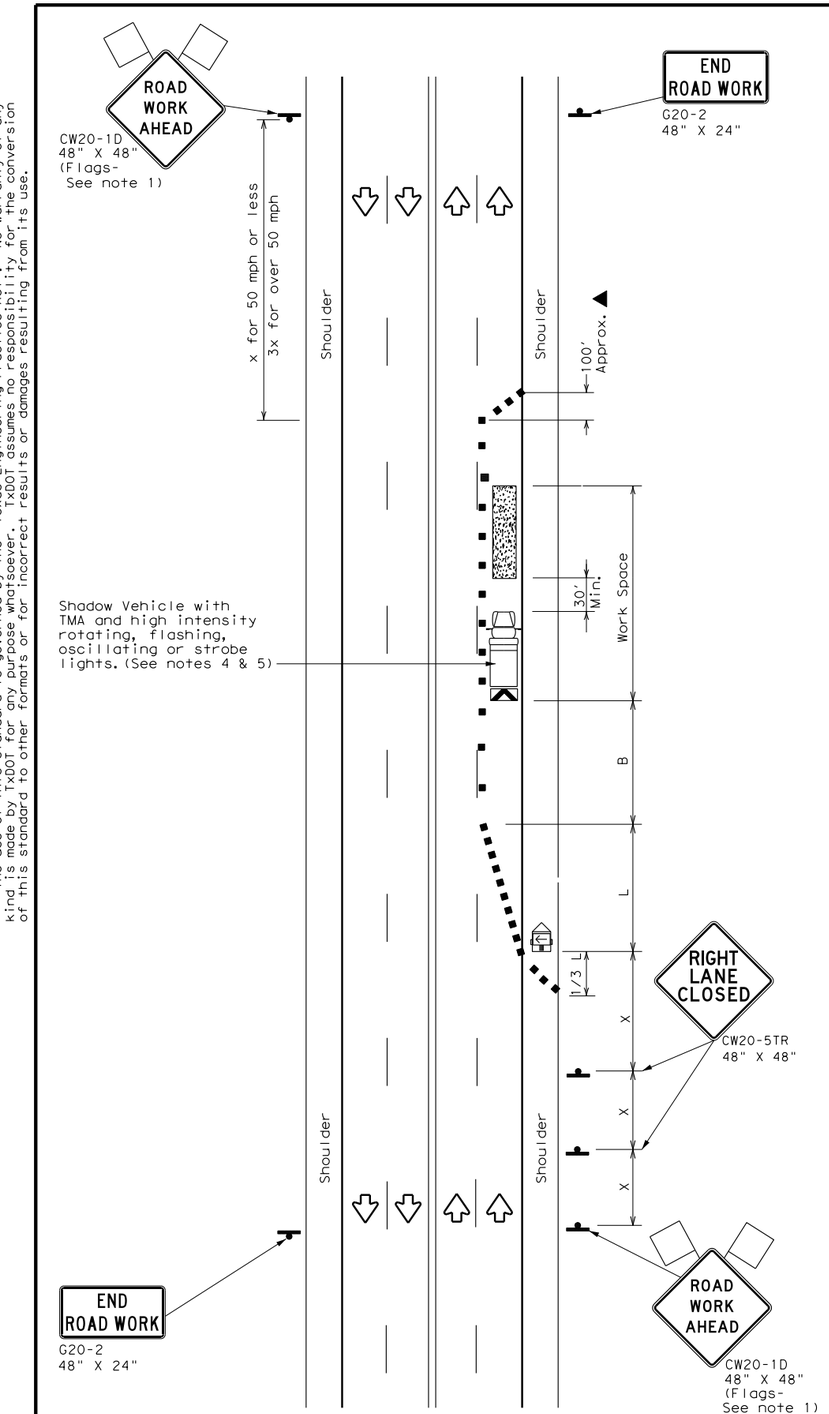

TCP (1-4a)

ONE LANE CLOSED

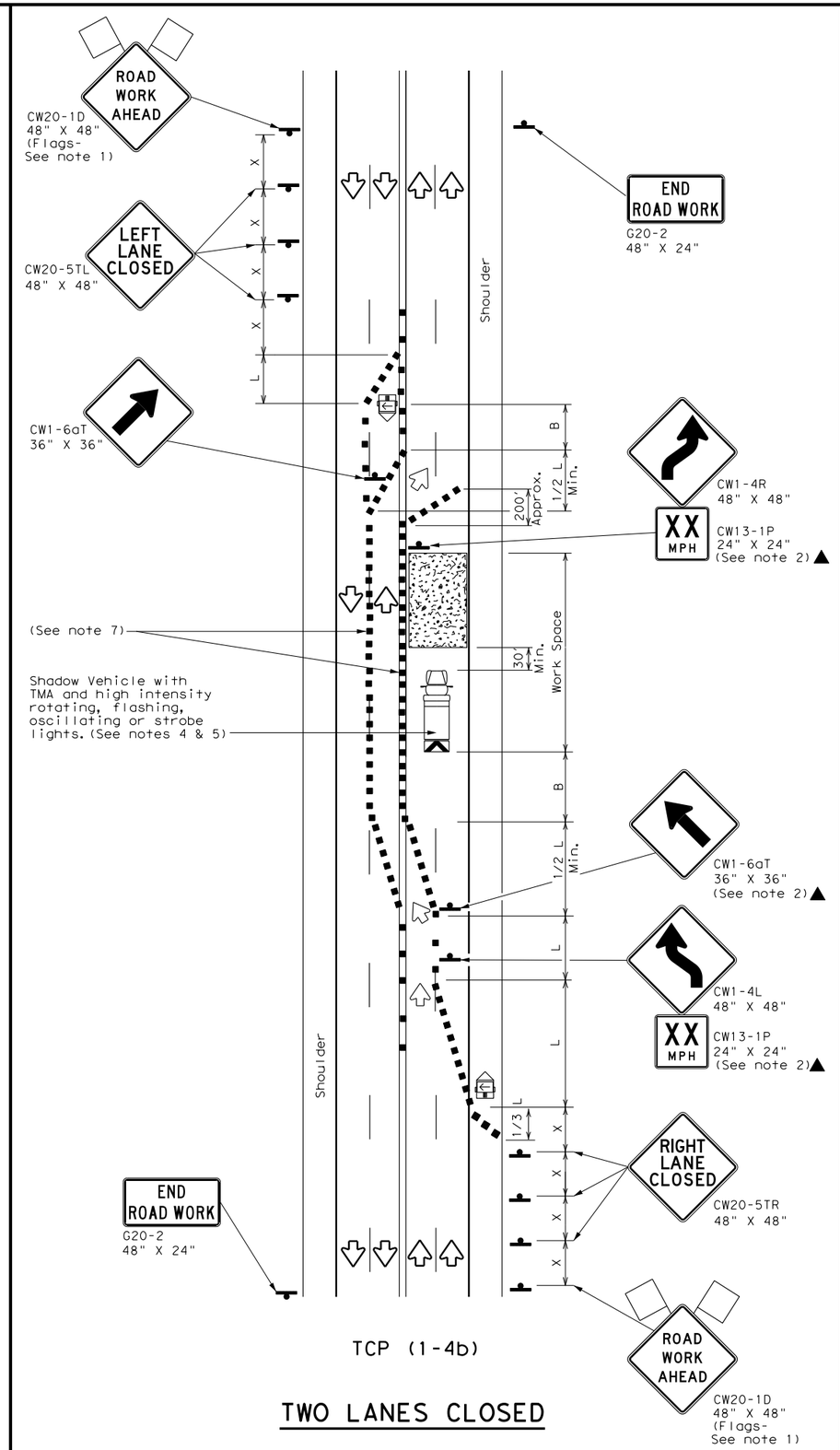

TCP (1-4b)

TWO LANES CLOSED

LEGEND

	Type 3 Barricade		Channelizing Devices
	Heavy Work Vehicle		Truck Mounted Attenuator (TMA)
	Trailer Mounted Flashing Arrow Board	M	Portable Changeable Message Sign (PCMS)
	Sign		Traffic Flow
	Flag		Flagger

Posted Speed *	Formula	Minimum Desirable Taper Lengths ** 10' Offset	11' Offset	12' Offset	Suggested Maximum Spacing of Channelizing Devices On a Taper	On a Tangent	Minimum Sign Spacing "X" Distance	Suggested Longitudinal Buffer Space "B"
30	$L = \frac{WS^2}{60}$	150'	165'	180'	30'	60'	120'	90'
35		205'	225'	245'	35'	70'	160'	120'
40		265'	295'	320'	40'	80'	240'	155'
45	L = WS	450'	495'	540'	45'	90'	320'	195'
50		500'	550'	600'	50'	100'	400'	240'
55		550'	605'	660'	55'	110'	500'	295'
60		600'	660'	720'	60'	120'	600'	350'
65		650'	715'	780'	65'	130'	700'	410'
70		700'	770'	840'	70'	140'	800'	475'
75		750'	825'	900'	75'	150'	900'	540'

* Conventional Roads Only
** Taper lengths have been rounded off.
L=Length of Taper(FT) W=Width of Offset(FT) S=Posted Speed(MPH)

TYPICAL USAGE

MOBILE	SHORT DURATION	SHORT TERM STATIONARY	INTERMEDIATE TERM STATIONARY	LONG TERM STATIONARY
	✓	✓		

GENERAL NOTES

1. Flags attached to signs where shown are REQUIRED.
2. All traffic control devices illustrated are REQUIRED, except those denoted with the triangle symbol may be omitted when stated elsewhere in the plans, or for routine maintenance work, when approved by the Engineer.
3. The CW20-1D "ROAD WORK AHEAD" sign may be repeated if the visibility of the work zone is less than 1500 feet.
4. A Shadow Vehicle with a TMA should be used anytime it can be positioned 30 to 100 feet in advance of the area of crew exposure without adversely affecting the performance or quality of the work. If workers are no longer present but road or work conditions require the traffic control to remain in place, Type 3 Barricades or other channelizing devices may be substituted for the Shadow Vehicle and TMA.
5. Additional Shadow Vehicles with TMAs may be positioned off the paved surface, next to those shown in order to protect wider work spaces.

TCP (1-4a)

6. If this TCP is used for a left lane closure , CW20-5TL "LEFT LANE CLOSED" signs shall be used and channelizing devices shall be placed on the centerline where needed to protect the work space from opposing traffic with the arrow panel placed in the closed lane near the end of the merging taper.

TCP (1-4b)

7. Where traffic is directed over a yellow centerline, channelizing devices which separate two-way traffic should be spaced on tapers at 20' or 15' if posted speeds are 35 mph or slower, and for tangent sections, at 1/2S where S is the speed in mph. This tighter device spacing is intended for the areas of conflicting markings, not the entire work zone.

Texas Department of Transportation

Traffic Operations Division Standard

TRAFFIC CONTROL PLAN LANE CLOSURES ON MULTILANE CONVENTIONAL ROADS

TCP(1-4)-18

FILE: tcp1-4-18.dgn	DN:	CK:	DW:	CK:
©TxDOT December 1985	CONT	SECT	JOB	HIGHWAY
REVISIONS 2-94 4-98 8-95 2-12 1-97 2-18	DIST		COUNTY	SHEET NO.

DATE:
FILE:

DISCLAIMER:
The use of this standard is governed by the "Texas Engineering Practice Act". No warranty of any kind is made by TxDOT for any purpose whatsoever. TxDOT assumes no responsibility for the conversion of this standard to other formats or for incorrect results or damages resulting from its use.

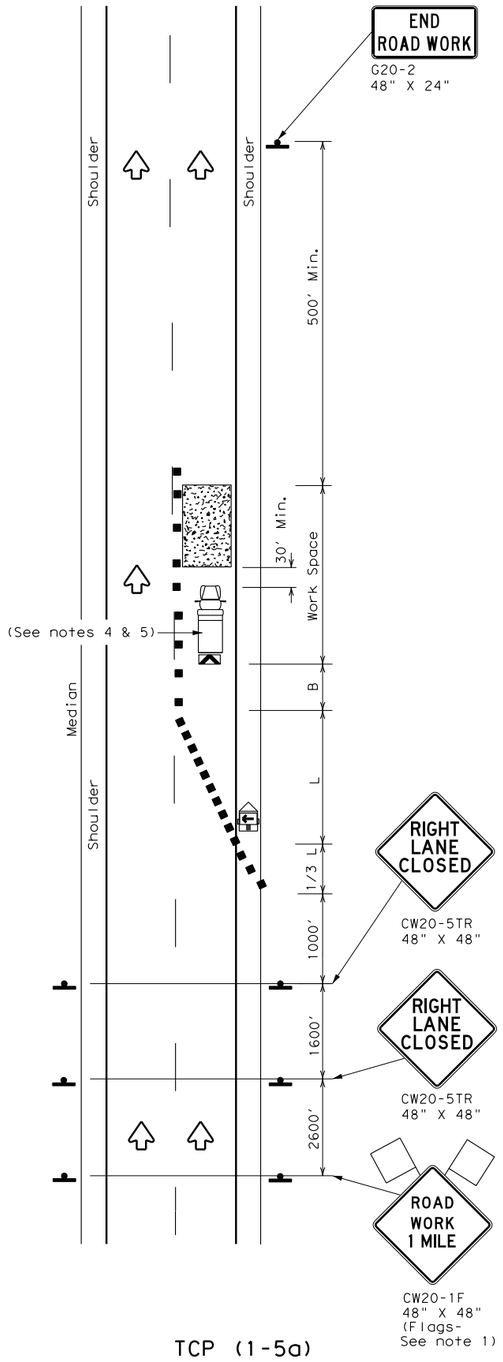

TCP (1-5a)

ONE LANE CLOSURE

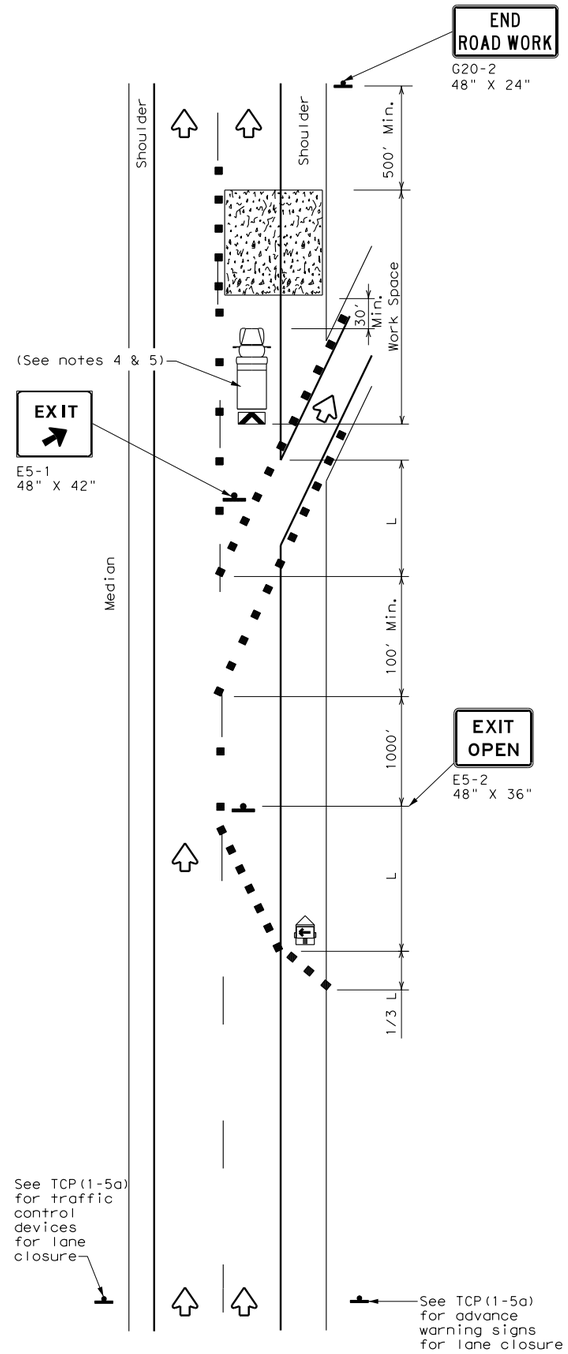

TCP (1-5b)

LANE CLOSURE NEAR EXIT RAMPS

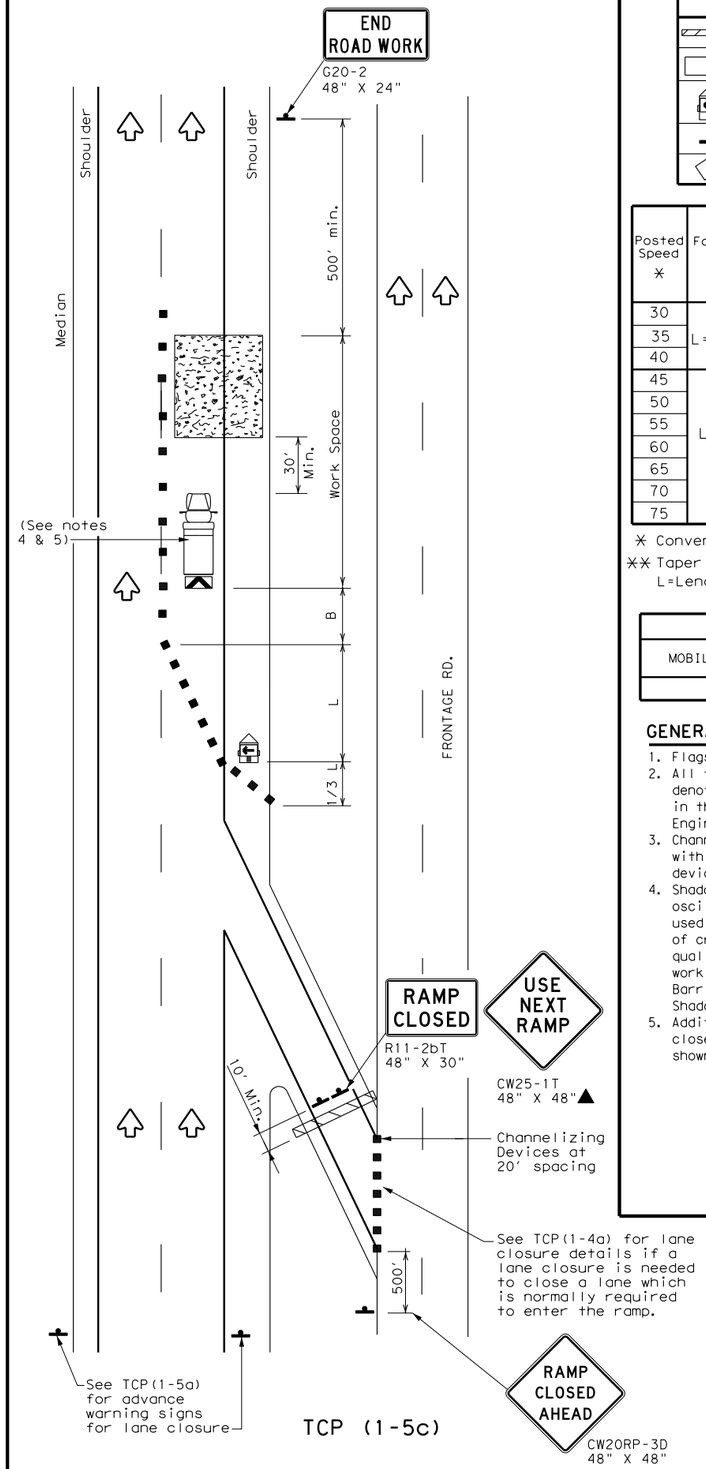

TCP (1-5c)

LANE CLOSURE NEAR ENTRANCE RAMPS

LEGEND

	Type 3 Barricade		Channelizing Devices
	Heavy Work Vehicle		Truck Mounted Attenuator (TMA)
	Trailer Mounted Flashing Arrow Board	M	Portable Changeable Message Sign (PCMS)
	Sign		Traffic Flow
	Flag		Flagger

Posted Speed ✳	Formula	Minimum Desirable Taper Lengths ✳✳ 10' Offset	11' Offset	12' Offset	Suggested Maximum Spacing of Channelizing Devices On a Taper	On a Tangent	Minimum Sign Spacing "X" Distance	Suggested Longitudinal Buffer Space "B"
30	$L = \frac{WS^2}{60}$	150'	165'	180'	30'	60'	120'	90'
35		205'	225'	245'	35'	70'	160'	120'
40		265'	295'	320'	40'	80'	240'	155'
45	L = WS	450'	495'	540'	45'	90'	320'	195'
50		500'	550'	600'	50'	100'	400'	240'
55		550'	605'	660'	55'	110'	500'	295'
60		600'	660'	720'	60'	120'	600'	350'
65		650'	715'	780'	65'	130'	700'	410'
70		700'	770'	840'	70'	140'	800'	475'
75		750'	825'	900'	75'	150'	900'	540'

✳ Conventional Roads Only

✳✳ Taper lengths have been rounded off.
L=Length of Taper(FT) W=Width of Offset(FT) S=Posted Speed(MPH)

TYPICAL USAGE

MOBILE	SHORT DURATION	SHORT TERM STATIONARY	INTERMEDIATE TERM STATIONARY	LONG TERM STATIONARY
		✓		

GENERAL NOTES

1. Flags attached to signs where shown, are REQUIRED.
2. All traffic control devices illustrated are REQUIRED, except those denoted with the triangle symbol may be omitted when stated elsewhere in the plans, or for routine maintenance work, when approved by the Engineer.
3. Channelizing devices used to close lanes may be supplemented with the Chevron Alignment Sign placed on every other channelizing device. Chevrons may be attached to plastic drums as per BC Standards.
4. Shadow Vehicle with TMA and high intensity rotating, flashing, oscillating or strobe lights. A Shadow Vehicle with a TMA should be used anytime it can be positioned 30 to 100 feet in advance of the area of crew exposure without adversely affecting the performance or quality of the work. If workers are no longer present but road or work conditions require the traffic control to remain in place, Type 3 Barricades or other channelizing devices may be substituted for the Shadow Vehicle and TMA.
5. Additional Shadow Vehicles with TMAs may be positioned in each closed lane, on the shoulder or off the paved surface, next to those shown in order to protect a wider work space.

Texas Department of Transportation

Traffic Operations Division Standard

TRAFFIC CONTROL PLAN LANE CLOSURES FOR DIVIDED HIGHWAYS

TCP(1-5)-18

FILE: tcp1-5-18.dgn	DN:	CK:	DW:	CK:
©TxDOT February 2012	CONT	SECT	JOB	HIGHWAY
REVISIONS 2-18	DIST	COUNTY		SHEET NO.

DATE:
FILE:

DISCLAIMER:
The use of this standard is governed by the "Texas Engineering Practice Act". No warranty of any kind is made by TxDOT for any purpose whatsoever. TxDOT assumes no responsibility for the conversion of this standard to other formats or for incorrect results or damages resulting from its use.

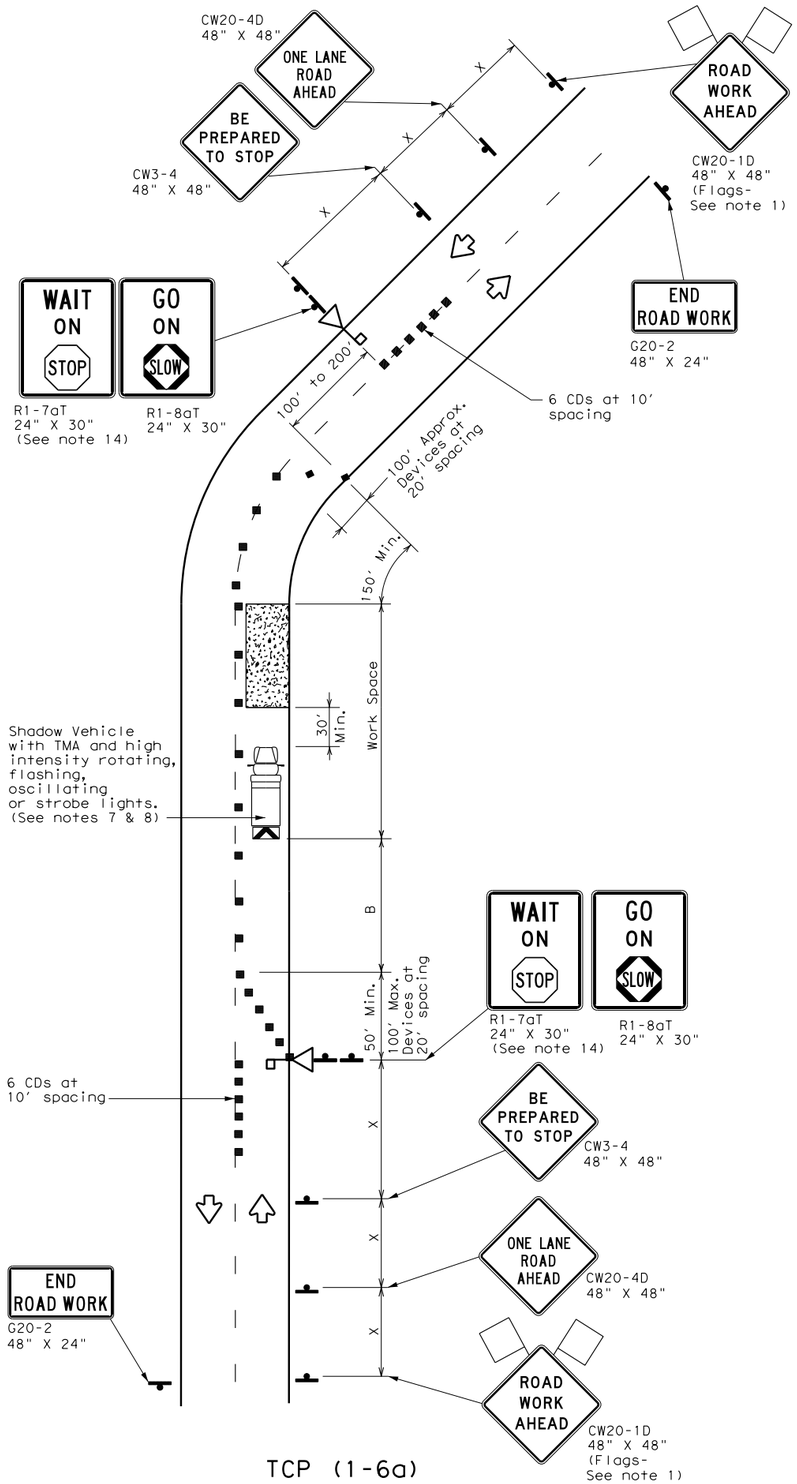

TCP (1-6a)

ONE LANE TWO-WAY CONTROL WITH STOP/SLOW AFADs

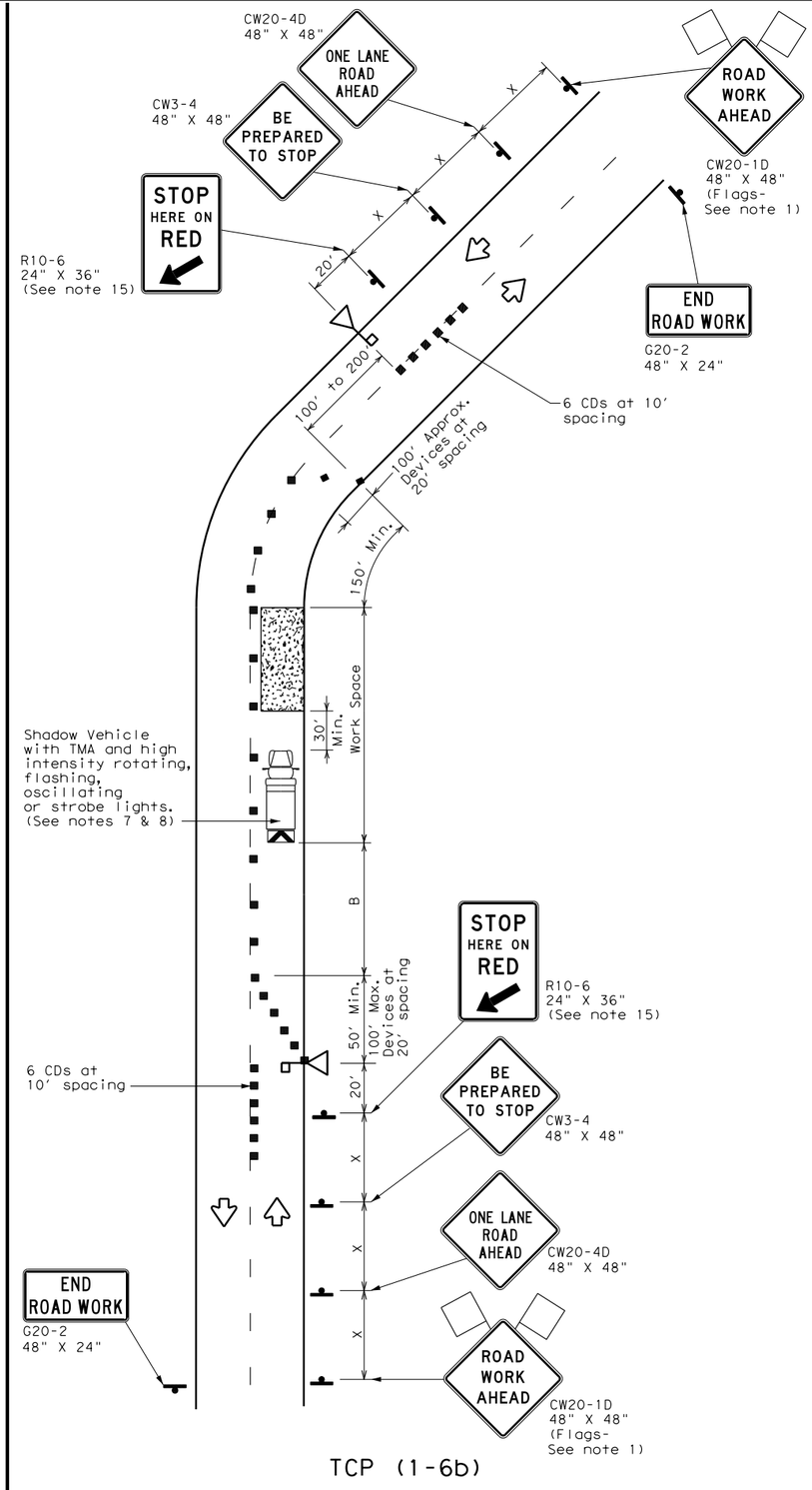

TCP (1-6b)

ONE LANE TWO-WAY CONTROL WITH RED/YELLOW LENS AFADs

LEGEND

	Type 3 Barricade		Channelizing Devices (CDs)
	Heavy Work Vehicle		Truck Mounted Attenuator (TMA)
	Automated Flagger Assistance Device (AFAD)	M	Portable Changeable Message Sign (PCMS)
	Sign		Traffic Flow
	Flag		Flagger

Posted Speed *	Formula	Minimum Desirable Taper Lengths ** 10' Offset	11' Offset	12' Offset	Suggested Maximum Spacing of Channelizing Devices On a Taper	On a Tangent	Minimum Sign Spacing "X" Distance	Suggested Longitudinal Buffer Space "B"	Stopping Sight Distance
30	$L = \frac{WS^2}{60}$	150'	165'	180'	30'	60'	120'	90'	200'
35		205'	225'	245'	35'	70'	160'	120'	250'
40		265'	295'	320'	40'	80'	240'	155'	305'
45	L = WS	450'	495'	540'	45'	90'	320'	195'	360'
50		500'	550'	600'	50'	100'	400'	240'	425'
55		550'	605'	660'	55'	110'	500'	295'	495'
60		600'	660'	720'	60'	120'	600'	350'	570'
65		650'	715'	780'	65'	130'	700'	410'	645'
70		700'	770'	840'	70'	140'	800'	475'	730'
75		750'	825'	900'	75'	150'	900'	540'	820'

* Conventional Roads Only
** Taper lengths have been rounded off.
L=Length of Taper(FT) W=Width of Offset(FT) S=Posted Speed(MPH)

TYPICAL USAGE

MOBILE	SHORT DURATION	SHORT TERM STATIONARY	INTERMEDIATE TERM STATIONARY	LONG TERM STATIONARY
	✓	✓		

GENERAL NOTES

1. Flags attached to signs where shown are REQUIRED.
2. AFADs shall only be used in situations where there is one lane of approaching traffic in the direction to be controlled.
3. Adequate stopping sight distance must be provided to each AFAD location for approaching traffic. (See table above).
4. Each AFAD shall be operated by a qualified/certified flagger. Flaggers operating AFADs shall not leave them unattended while they are in use.
5. One flagger may operate two AFADs only when the flagger has an unobstructed view of both AFADs and of the approaching traffic in both directions.
6. When pilot cars are used, a flagger controlling traffic shall be located on each approach. AFADs shall not be operated by the pilot car operator.
7. All AFADs shall be equipped with gate arms with an orange or fluorescent red-orange flag attached to the end of the gate arm. The flag shall be a minimum of 16" square.
8. A Shadow Vehicle with a TMA should be used anytime it can be positioned 30 to 100 feet in advance of the area of crew exposure without adversely affecting the performance or quality of the work. If workers are no longer present but road or work conditions require the traffic control to remain in place, Type 3 Barricades or other channelizing devices may be substituted for the Shadow Vehicle and TMA.
9. Additional Shadow Vehicles with TMAs may be positioned off the paved surface, next to those shown in order to protect wider work spaces.
10. Flaggers should use two-way radios or other methods of communication to control traffic.
11. Length of work space should be based on the ability of flaggers to communicate.
12. If the work space is located near a horizontal or vertical curve, the buffer distances should be increased in order to maintain stopping sight distance to the AFAD.
13. Channelizing devices on the center line may be omitted when a pilot car is leading traffic and approved by the Engineer.
14. The R1-7aT "WAIT ON STOP" sign and the R1-8aT "GO ON SLOW" sign shall be installed at the AFAD location on separate supports or they may be fabricated as one 48" x 30" sign. They shall not obscure the face of the STOP/SLOW AFAD.
15. The R10-6 "STOP HERE ON RED" arrow sign shall be offset so as not to obscure the lenses of the AFAD.

Texas Department of Transportation — Traffic Operations Division Standard

TRAFFIC CONTROL PLAN
AUTOMATED FLAGGER ASSISTANCE DEVICES (AFADS)

TCP(1-6)-18

FILE: tcp1-6-18.dgn	DN:	CK:	DW:	CK:
©TxDOT February 2012	CONT	SECT	JOB	HIGHWAY
REVISIONS 2-18	DIST		COUNTY	SHEET NO.

DATE:
FILE: